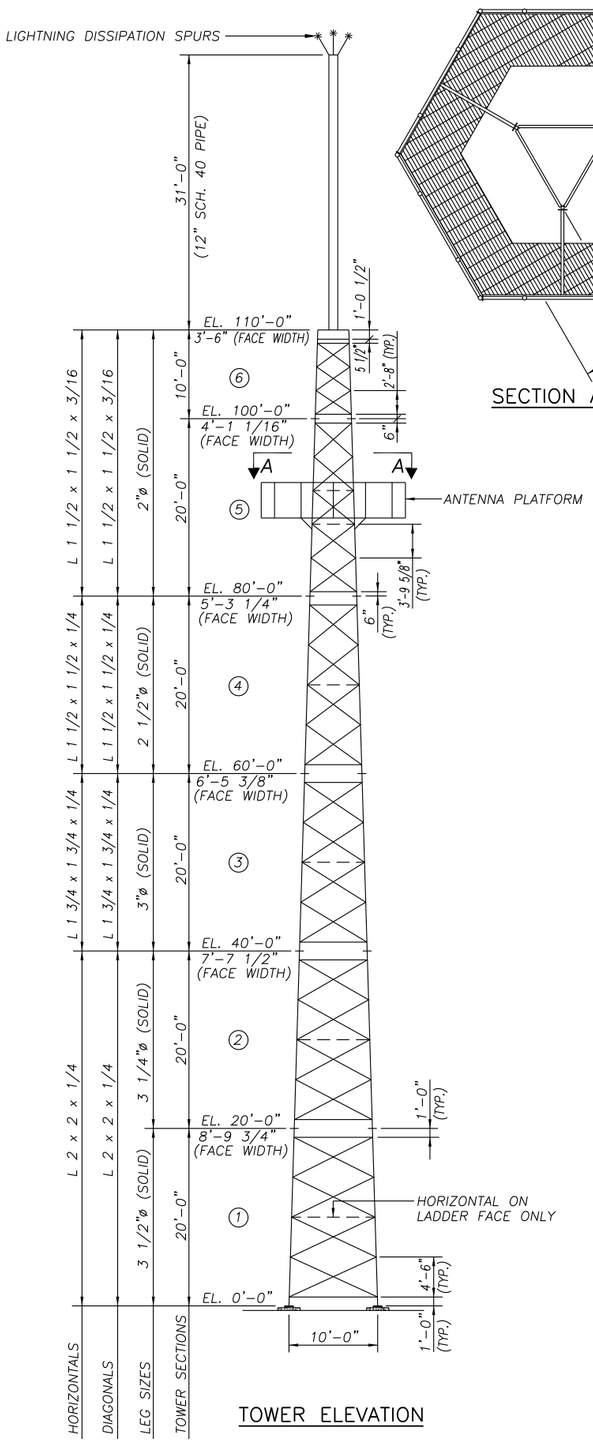

TOWER ELEVATION

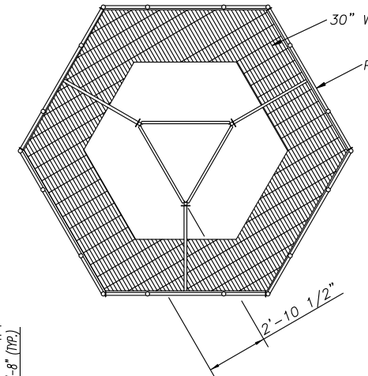

SECTION A–A

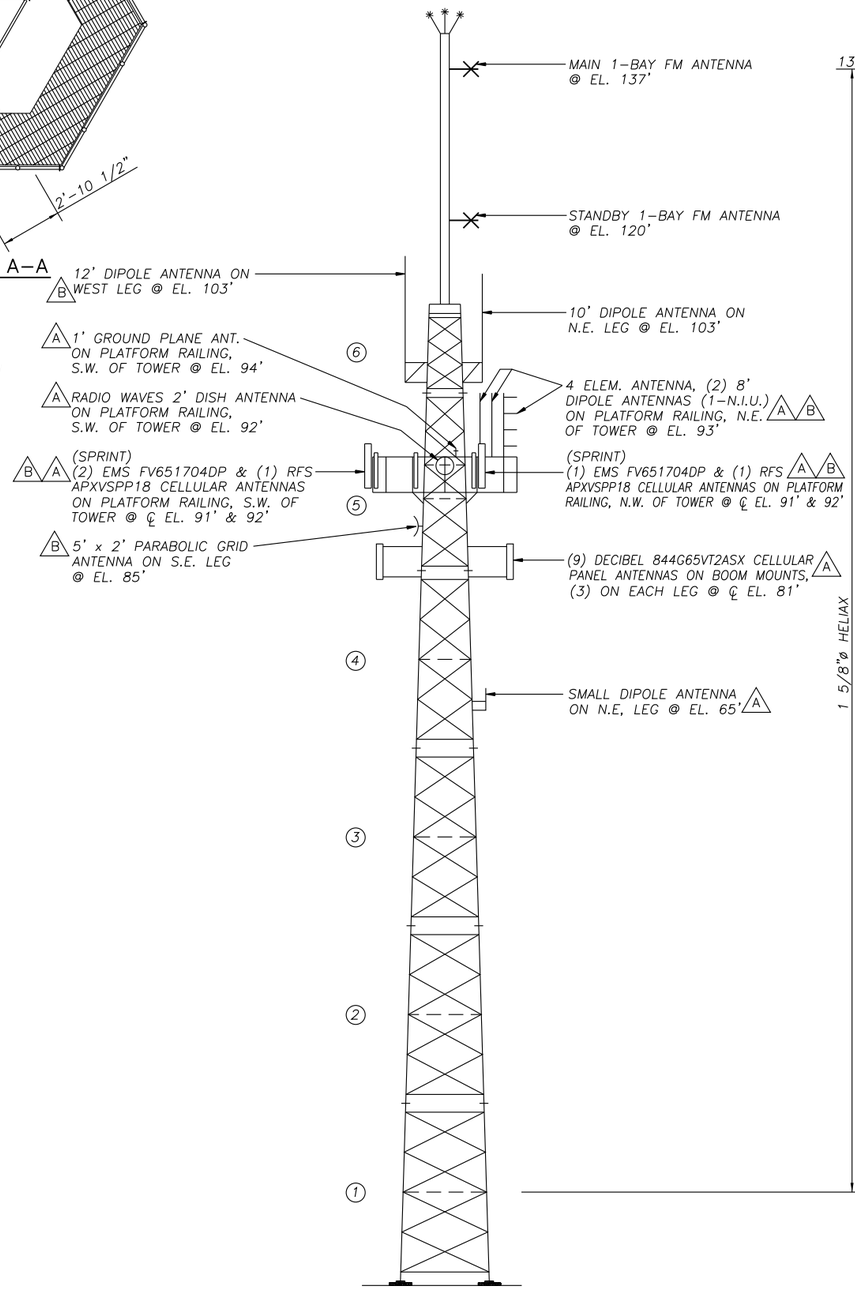

TRANSMISSION LINE ELEVATION

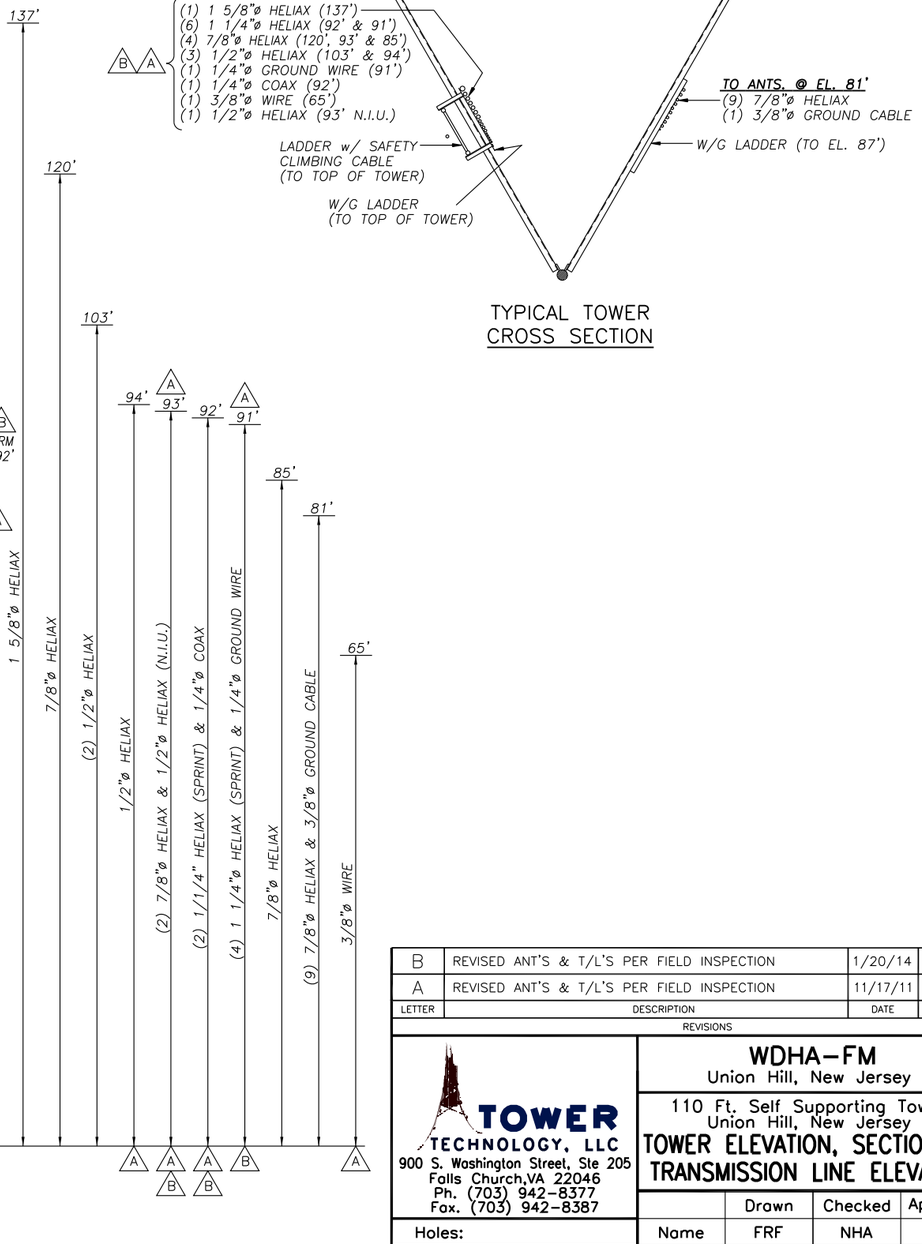

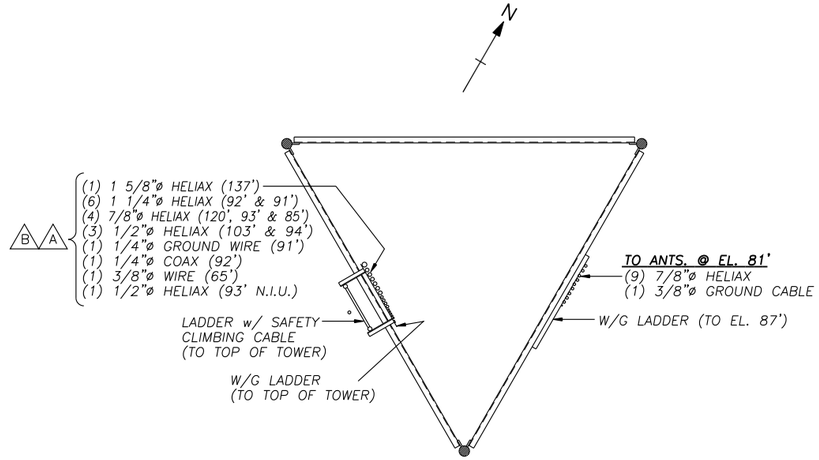

TYPICAL TOWER CROSS SECTION

LETTER	DESCRIPTION	DATE	APPROVED
B	REVISED ANT'S & T/L'S PER FIELD INSPECTION	1/20/14	BB
A	REVISED ANT'S & T/L'S PER FIELD INSPECTION	11/17/11	BB

REVISIONS

TOWER TECHNOLOGY, LLC
900 S. Washington Street, Ste 205
Falls Church,VA 22046
Ph. (703) 942-8377
Fax. (703) 942-8387

WDHA–FM
Union Hill, New Jersey

110 Ft. Self Supporting Tower
Union Hill, New Jersey

TOWER ELEVATION, SECTIONS & TRANSMISSION LINE ELEVATION

	Drawn	Checked	Approved
Name	FRF	NHA	KM
Date	7/27/05	7/27/05	7/27/05

Holes:
Matl:
Tolerance
Electrodes

Drawing No. 05–138–001

Sheet 1 of 1