ORIGINAL

Federal Communications Commission
Washington, D. C. 20554

Approved by OMB
3060-0627
Expires 01/31/98

FOR FCC USE ONLY

817012

FCC 302-AM
APPLICATION FOR AM BROADCAST STATION LICENSE

(Please read instructions before filling out form.

FOR COMMISSION USE ONLY
FILE NO. BMML-20100421ADI

FILED/ACCEPTED
APR 21 2010
Federal Communications Commission
Office of the Secretary

SECTION I - APPLICANT FEE INFORMATION

1. PAYOR NAME (Last, First, Middle Initial)
Communicom Co. of Louisiana, L.P.

MAILING ADDRESS (Line 1) (Maximum 35 characters)
220 Josephine Street, Suite 200

MAILING ADDRESS (Line 2) (Maximum 35 characters)

CITY	STATE OR COUNTRY (if foreign address)	ZIP CODE
Denver	CO	80206

TELEPHONE NUMBER (include area code)	CALL LETTERS	OTHER FCC IDENTIFIER (If applicable)
303-759-8481	WLNO	

2. A. Is a fee submitted with this application? [✓] Yes [ ] No

B. If No, indicate reason for fee exemption (see 47 C.F.R. Section

[ ] Governmental Entity [ ] Noncommercial educational licensee [ ] Other (Please explain):

C. If Yes, provide the following information:

Enter in Column (A) the correct Fee Type Code for the service you are applying for. Fee Type Codes may be found in the "Mass Media Services Fee Filing Guide." Column (B) lists the Fee Multiple applicable for this application. Enter fee amount due in Column (C).

(A) FEE TYPE CODE	(B) FEE MULTIPLE	(C) FEE DUE FOR FEE TYPE CODE IN COLUMN (A)	FOR FCC USE ONLY
MMR	0001	$ 615.00	

To be used only when you are requesting concurrent actions which result in a requirement to list more than one Fee Type Code.

(A)	(B)	(C)	FOR FCC USE ONLY
MOR	0001	$ 705.00	

ADD ALL AMOUNTS SHOWN IN COLUMN C, AND ENTER THE TOTAL HERE. THIS AMOUNT SHOULD EQUAL YOUR ENCLOSED REMITTANCE.

TOTAL AMOUNT REMITTED WITH THIS APPLICATION	FOR FCC USE ONLY
$ 1320.00	

SECTION II - APPLICANT INFORMATION		
1. NAME OF APPLICANT Communicom Co.of Louisiana, L P		
MAILING ADDRESS 220 Josephine Street, Suite 200		
CITY Denver	STATE CO	ZIP CODE 80206

2. This application is for:

☑ Commercial ☐ Noncommercial

☐ AM Directional ☐ AM Non-Directional

Call letters	Community of License	Construction Permit File No.	Modification of Construction Permit File No(s).	Expiration Date of Last Construction Permit
WLNO	New Orleans, LA	N/A	N/A	N/A

3. Is the station now operating pursuant to automatic program test authority in accordance with 47 C.F.R. Section 73.1620?

☐ Yes ☑ No

If No, explain in an Exhibit.

Exhibit No. 3

4. Have all the terms, conditions, and obligations set forth in the above described construction permit been fully met?

☑ Yes ☐ No

If No, state exceptions in an Exhibit.

Exhibit No.

5. Apart from the changes already reported, has any cause or circumstance arisen since the grant of the underlying construction permit which would result in any statement or representation contained in the construction permit application to be now incorrect?

☐ Yes ☑ No

If Yes, explain in an Exhibit.

Exhibit No.

6. Has the permittee filed its Ownership Report (FCC Form 323) or ownership certification in accordance with 47 C.F.R. Section 73.3615(b)?

☐ Yes ☐ No

☑ Does not apply

If No, explain in an Exhibit.

Exhibit No.

7. Has an adverse finding been made or an adverse final action been taken by any court or administrative body with respect to the applicant or parties to the application in a civil or criminal proceeding, brought under the provisions of any law relating to the following: any felony; mass media related antitrust or unfair competition; fraudulent statements to another governmental unit; or discrimination?

☐ Yes ☑ No

If the answer is Yes, attach as an Exhibit a full disclosure of the persons and matters involved, including an identification of the court or administrative body and the proceeding (by dates and file numbers), and the disposition of the litigation. Where the requisite information has been earlier disclosed in connection with another application or as required by 47 U.S.C. Section 1.65(c), the applicant need only provide: (i) an identification of that previous submission by reference to the file number in the case of an application, the call letters of the station regarding which the application or Section 1.65 information was filed, and the date of filing; and (ii) the disposition of the previously reported matter.

Exhibit No.

8. Does the applicant, or any party to the application, have a petition on file to migrate to the expanded band (1605-1705 kHz) or a permit or license either in the existing band or expanded band that is held in combination (pursuant to the 5 year holding period allowed) with the AM facility proposed to be modified herein?

☐ Yes ☑ No

If Yes, provide particulars as an Exhibit.

Exhibit No.

The APPLICANT hereby waives any claim to the use of any particular frequency or of the electromagnetic spectrum as against the regulatory power of the United States because use of the same, whether by license or otherwise, and requests and authorization in accordance with this application. (See Section 304 of the Communications Act of 1934, as amended).

The APPLICANT acknowledges that all the statements made in this application and attached exhibits are considered material representations and that all the exhibits are a material part hereof and are incorporated herein as set out in full in

CERTIFICATION

1. By checking Yes, the applicant certifies, that, in the case of an individual applicant, he or she is not subject to a denial of federal benefits that includes FCC benefits pursuant to Section 5301 of the Anti-Drug Abuse Act of 1988, 21 U.S.C. Section 862, or, in the case of a non-individual applicant (e.g., corporation, partnership or other unincorporated association), no party to the application is subject to a denial of federal benefits that includes FCC benefits pursuant to that section. For the definition of a "party" for these purposes, see 47 C.F.R. Section 1.2002(b).

☑ Yes ☐ No

2. I certify that the statements in this application are true, complete, and correct to the best of my knowledge and belief, and are made in good faith.

Name	Signature	
Richard Kylberg, Jr.		
Title	Date	Telephone Number
Manager	4·19·10	303-759-8481

WILLFUL FALSE STATEMENTS ON THIS FORM ARE PUNISHABLE BY FINE AND/OR IMPRISONMENT (U.S. CODE, TITLE 18, SECTION 1001), AND/OR REVOCATION OF ANY STATION LICENSE OR CONSTRUCTION

FCC NOTICE TO INDIVIDUALS REQUIRED BY THE PRIVACY ACT AND THE PAPERWORK REDUCTION ACT

The solicitation of personal information requested in this application is authorized by the Communications Act of 1934, as amended. The Commission will use the information provided in this form to determine whether grant of the application is in the public interest. In reaching that determination, or for law enforcement purposes, it may become necessary to refer personal information contained in this form to another government agency. In addition, all information provided in this form will be available for public inspection. If information requested on the form is not provided, the application may be returned without action having been taken upon it or its processing may be delayed while a request is made to provide the missing information. Your response is required to obtain the requested authorization.

Public reporting burden for this collection of information is estimated to average 639 hours and 53 minutes per response, including the time for reviewing instructions, searching existing data sources, gathering and maintaining the data needed, and completing and reviewing the collection of information. Comments regarding this burden estimate or any other aspect of this collection of information, including suggestions for reducing the burden, can be sent to the Federal Communications Commission, Records Management Branch, Paperwork Reduction Project (3060-0627), Washington, D. C. 20554. Do NOT send completed forms to this address.

THE FOREGOING NOTICE IS REQUIRED BY THE PRIVACY ACT OF 1974, P.L. 93-579, DECEMBER 31, 1974, 5 U.S.C. 552a(e)(3), AND THE PAPERWORK REDUCTION ACT OF 1980, P.L. 96-511, DECEMBER 11, 1980, 44 U.S.C. 3507.

EXHIBIT NO. 3.

The station is not operating pursuant to automatic program test authority ("PTA") because it utilizes a directional array. Rather, the station is operating pursuant to special temporary authority ("STA") -- BSTA-20090206ACQ. A request to extend the STA is pending (BESTA-20100204ADF).

READ INSTRUCTIONS CAREFULLY BEFORE PROCEEDING

FEDERAL COMMUNICATIONS COMMISSION
REMITTANCE ADVICE
FORM 159

Approved by OMB 3060-0589

(1) LOCKBOX #	SPECIAL USE ONLY
	FCC USE ONLY

SECTION A – PAYER INFORMATION

(2) PAYER NAME (if paying by credit card enter name exactly as it appears on the card)	(3) TOTAL AMOUNT PAID (U.S. Dollars and cents)
Communicom Co. of Louisiana, L.P.	$1,320.00

(4) STREET ADDRESS LINE NO 1: 220 Josephine Street, Suite 200

(5) STREET ADDRESS LINE NO 2:

(6) CITY	(7) STATE	(8) ZIP CODE
Denver	CO	80206

(9) DAYTIME TELEPHONE NUMBER (include area code)	(10) COUNTRY CODE (if not in U.S.A.)
303-759-8481	

FCC REGISTRATION NUMBER (FRN) REQUIRED

(11) PAYER (FRN)	(12) FCC USE ONLY
0001-6058-64	

IF MORE THAN ONE APPLICANT, USE CONTINUATION SHEETS (FORM 159-C)
COMPLETE SECTION BELOW FOR EACH SERVICE. IF MORE BOXES ARE NEEDED, USE CONTINUATION SHEET

(13) APPLICANT NAME: Communicom Co. of Louisiana, L.P.

(14) STREET ADDRESS LINE NO 1: 220 Josephine Street, Suite 200

(15) STREET ADDRESS LINE NO 2:

(16) CITY	(17) STATE	(18) ZIP CODE
Denver	CO	80206

(19) DAYTIME TELEPHONE NUMBER (include area code)	(20) COUNTRY CODE (if not in U.S.A.)
303-758-8481	

FCC REGISTRATION NUMBER (FRN) REQUIRED

(21) APPLICANT (FRN)	(22) FCC USE ONLY
0001-6058-64	

COMPLETE SECTION C FOR EACH SERVICE. IF MORE BOXES ARE NEEDED, USE CONTINUATION SHEET

(23A) CALL SIGN/OTHER ID	(24A) PAYMENT TYPE CODE	(25A) QUANTITY
WLNO	MMR	1
(26A) FEE DUE FOR (PTC)	(27A) TOTAL FEE	FCC USE ONLY
$615.00	$615.00	
(28A) FCC CODE 1	(29A) FCC CODE 2	

(23B) CALL SIGN/OTHER ID	(24B) PAYMENT TYPE CODE	(25B) QUANTITY
WLNO	MOR	1
(26B) FEE DUE FOR (PTC)	(27B) TOTAL FEE	FCC USE ONLY
$705.00	$705.00	
(28B) FCC CODE 1	(29B) FCC CODE 2	

SECTION D – CERTIFICATION

CERTIFICATION STATEMENT

I, Richard Kylberg, certify under penalty of perjury that the foregoing and supporting information is true and correct to the best of my knowledge, information and belief

SIGNATURE _____ DATE 4·19·10

SECTION E - CREDIT CARD PAYMENT INFORMATION

MASTERCARD ____ VISA ____ AMEX X DISCOVER ____

ACCOUNT NUMBER 378268345142035 EXPIRATION DATE 06/2010

I hereby authorize the FCC to charge my credit card for the service(s)/authorization herein described.

SIGNATURE _____ DATE 4·19·10

FCC FORM 302-AM, SECTION III

APPLICATION FOR STATION LICENSE
(Method of Moments Proof)

RADIO STATION WLNO
(Facility ID # 58393)

COMMUNICOM CO. of LOUISIANA, L.P.

1060 kHz, 5.0/50.0 kW, DA-2

NEW ORLEANS, LOUISIANA

APRIL, 2010

Copyright (c) 2010

WILLOUGHBY & VOSS
BROADCAST TECHNICAL CONSULTANTS
P.O. BOX 701190
SAN ANTONIO, TEXAS 78270-1190
(210) 525-1111

COMMUNICOM CO. of LOUISIANA, L.P.
WLNO RADIO
1060 kHz, 5.0/50.0 kW, DA-2
NEW ORLEANS, LOUISIANA
APRIL, 2010

APPLICATION FOR STATION LICENSE
(Method of Moments Proof)

FCC Form 302, Section III

Technical Summary Statement

Exhibits:

1. Verification of Method of Moments Model
2. DA-Day Operating Parameter Determination
3. DA-Night Operating Parameter Determination
4. Details of Model for Towers Individually Driven
5. Details of Model for DA-DAY
6. Details of Model for DA-NIGHT
7. Sample System Measurements
8. Reference Field Strength Measurements
9. Direct Measurement of Power
10. Antenna Monitor and Sample System
11. Radio Frequency Radiation Considerations
12. Statement Regarding As Built Array Geometry

SECTION III - LICENSE APPLICATION ENGINEERING DATA

Name of Applicant
Communicom Co. of Louisiana, L.P.

PURPOSE OF AUTHORIZATION APPLIED FOR: (check one)

X Station License W Direct Measurement of Power

1. Facilities authorized in construction permit					
Call Sign	File No. of Construction Permit (if applicable)	Frequency (kHz)	Hours of Operation	Power in kilowatts	
				Night	Day
WLNO		1060	Unlimited	5.0	50.0

2. Station location	
State	City or Town
Louisiana	New Orleans

3. Transmitter location			
State	County	City or Town	Street address (or other identification)
LA	Plaquemine Parish	Belle Chase	300 Woodland Hwy.

4. Main studio location			
State	County	City or Town	Street address (or other identification)
LA	Jefferson Parish	Gretna	401 Whitney Ave., Ste. 160

5. Remote control point location (specify only if authorized directional antenna)			
State	County	City or Town	Street address (or other identification)
LA	Jefferson Parish	Gretna	401 Whitney Ave., Ste. 160

6. Has type-approved stereo generating equipment been installed? W Yes X No

7. Does the sampling system meet the requirements of 47 C.F.R. Section 73.68? X Yes W No

W Not Applicable

Attach as an Exhibit a detailed description of the sampling system as installed.

Exhibit No. Exh. 7

8. Operating constants:	
RF common point or antenna current (in amperes) without modulation for night system 10.4	RF common point or antenna current (in amperes) without modulation for day system 32.4
Measured antenna or common point resistance (in ohms) at operating frequency Night 50.0 Day 50.0	Measured antenna or common point reactance (in ohms) at operating frequency Night -j 10.0 Day -j 10.0

Antenna indications for directional operation

Towers	Antenna monitor Phase reading(s) in degrees		Antenna monitor sample current ratio(s)		Antenna base currents	
	Night	Day	Night	Day	Night	Day
1 (SE)	-5.4		0.494			
2 (EC)	0.0		1.000			
3 (NE)	+0.4	+86.9	0.488	1.068		
4 (SW)	+75.0		0.456			
5 (WC)	+80.0		0.934			
6 (NW)	+85.6		0.499			
DAY 7 (N)		0.0		1.000		

Manufacturer and type of antenna monitor: Potomac Instruments 1901-7, Ser #785

SECTION III - Page 2

9. Description of antenna system (If directional antenna is used, the information requested below should be given for each element of the array. Use separate sheets if necessary.)

Type Radiator	Overall height in meters of radiator above base insulator, or above base, if grounded.	Overall height in meters above ground (without obstruction lighting)	Overall height in meters above ground (include obstruction lighting)	If antenna is either top loaded or sectionalized, describe fully in an Exhibit.
7 uniform cross-section, base insulated, guyed, steel towers.	70.71	71.6	72.3	Exhibit No. DNA

Excitation X Series W Shunt

Geographic coordinates to nearest second. For directional antenna give coordinates of center of array. For single vertical radiator give tower location.

North Latitude	West Longitude
29° 52' 46"	89° 59' 51"

If not fully described above, attach as an Exhibit further details and dimensions including any other antenna mounted on tower and associated isolation circuits. Exhibit No. DNA

Also, if necessary for a complete description, attach as an Exhibit a sketch of the details and dimensions of ground system. Exhibit No. DNA

10. In what respect, if any, does the apparatus constructed differ from that described in the application for construction permit or in the permit?

Does Not Apply

11. Give reasons for the change in antenna or common point resistance.

Does Not Apply

I certify that I represent the applicant in the capacity indicated below and that I have examined the foregoing statement of technical information and that it is true to the best of my knowledge and belief.

Name (Please Print or Type)	Signature (check appropriate box below)
Lyndon H. Willoughby	Lyndon H. Willoughby
Address (include ZIP Code)	Date
Willoughby & Voss, LLC. P.O. Box 701190 San Antonio, Texas 78270-1190	April 7, 2010
	Telephone No. (Include Area Code)
	210-862-5285

W Technical Director

W Chief Operator

W Other (specify)

W Registered Professional Engineer

X Technical Consultant

WLNO - Technical Summary Statement

These technical exhibits support an application for direct measurement of power for radio station WLNO, New Orleans, Louisiana. WLNO operates on 1060 kHz, and WLNO is currently licensed by the FCC.

Information is provided herein demonstrating that the directional antenna parameters for both the daytime and nighttime patterns have been determined in accordance with the requirements of Section 73.151(c) of the FCC Rules. The system has been adjusted to produce antenna monitor parameters within +/- 5 percent in ratio and +/- 3 degrees in phase of the modeled values, as required by the Rules.

Lyndon H. Willoughby

Lyndon H. Willoughby
Willoughby & Voss, LLC.
April 7, 2010

WLNO - Verification of Method of Moments Model - Exhibit 1

The base impedance of each tower was measured with a Hewlett-Packard 8753C network analyzer and a Tunwall Radio directional coupler, in a calibrated measurement system.

The measurement point and the open circuit point ("Reference Point"), was at the normal mounting location of the toroidal transformer (removed for calibration measurements). The RF current travels on copper tubing through the ATU bowl insulator and is connected to the tower. There are no shunt components between the "Reference Point" and the tower base, except, for very high impedance (approximately 58 kohm) static drain coils. Due to the high impedance of the static drains, they exhibited no effect on the circuit impedance but were included in the process of calibrating the method of moments model ("model") to converge with the measured self impedances.

The following pages show the calculation of circuits which were performed to relate the model impedances of the tower feedpoints to the Reference Point measured impedances. Westberg Circuit Analysis Program ("WCAP"), was used to calculate values for the assumed circuit.

In each of the WCAP tabulations, node 2 represents the ATU Reference Point and node 3 represents the feedpoint of the tower. Ground potential is represented by node 0. The calculated Reference Point impedance is shown below "TO IMPEDANCE" on line R 1>2 following the phantom 1.0 ohm resistors that were included in series with the drive current sources (I 0 1), to provide calculation points for the impedances. The tower feedpoint impedances from the method of moments model are represented by complex loads from node 3 to ground (R 3>0). The assumed stray capacitance of 0.00003 uF for all towers appear at C 3>0 on the WCAP printout.

The modeled and measured self-impedance at the ATU Reference Point, with all other towers open circuited at their Reference Point, agree within the +/-2 ohms and +/- 4% (resistance and reactance), as required by the FCC Rules.

WCAP - WLNO T1 OC Self analysis 03242010

WCAP OUTPUT AT FREQUENCY: 1.060 MHz

NODE VOLTAGES

Node:	1	101.9560 ∡	47.6443° V
Node:	2	101.3194 ∡	48.0790° V
Node:	3	94.6003 ∡	44.6518° V

WCAP PART		CURRENT IN	CURRENT OUT

	WCAP PART		BRANCH VOLTAGE	BRANCH CURRENT
L	2→3	1.34000000	8.91 ∡ 87.465° V	1.00 ∡ -2.535° A
R	1→2	1.00000000	1.00 ∡ -2.600° V	1.00 ∡ -2.600° A
C	3→0	0.00003000	94.60 ∡ 44.652° V	0.02 ∡ 134.652° A
R	3→0	62.61800000	94.60 ∡ 44.652° V	1.01 ∡ -3.262° A
L	2→0	8558.00000000	101.32 ∡ 48.079° V	0.00 ∡ -41.921° A

	WCAP PART		FROM IMPEDANCE	TO IMPEDANCE
L	2→3	1.34000000	64.38 + j 78.417	64.38 + j 69.492
R	1→2	1.00000000	65.20 + j 78.382	64.20 + j 78.382
C	3→0	0.00003000	0.00 - j 5004.872	0.00 + j 0.000
R	3→0	62.61800000	62.62 + j 69.335	0.00 + j 0.000
L	2→0	8558.00000000	0.00 + j 56997.790	0.00 + j 0.000

WCAP PART	VSWR

WCAP INPUT DATA:

	1.0600	0.00001000	1	
L	1.34000000	2	3	0.00000000
R	1.00000000	1	2	0.00000000
I	1.00000000	0	1	357.40000000
C	0.00003000	3	0	
R	62.61800000	3	0	69.33500000
L	8558.00000000	2	0	0.00000000

WCAP - WLNO T2 OC Self analysis 03242010

WCAP OUTPUT AT FREQUENCY: 1.060 MHz

NODE VOLTAGES

Node:	1	99.3968 ∡	46.6906° V
Node:	2	98.7475 ∡	47.1305° V
Node:	3	94.0197 ∡	44.6374° V

WCAP PART		CURRENT IN	CURRENT OUT

	WCAP PART		BRANCH VOLTAGE	BRANCH CURRENT
L	2→3	0.95000000	6.32 ∡ 87.464° V	1.00 ∡ -2.536° A
R	1→2	1.00000000	1.00 ∡ -2.600° V	1.00 ∡ -2.600° A
C	3→0	0.00003000	94.02 ∡ 44.637° V	0.02 ∡ 134.637° A
R	3→0	62.25800000	94.02 ∡ 44.637° V	1.01 ∡ -3.258° A
L	2→0	8558.00000000	98.75 ∡ 47.130° V	0.00 ∡ -42.870° A

	WCAP PART		FROM IMPEDANCE	TO IMPEDANCE
L	2→3	0.95000000	64.00 + j 75.373	64.00 + j 69.046
R	1→2	1.00000000	64.83 + j 75.346	63.83 + j 75.346
C	3→0	0.00003000	0.00 - j 5004.872	0.00 + j 0.000
R	3→0	62.25800000	62.26 + j 68.892	0.00 + j 0.000
L	2→0	8558.00000000	0.01 + j 56997.790	0.00 + j 0.000

WCAP PART	VSWR

WCAP INPUT DATA:

	1.0600	0.00001000		1
L	0.95000000	2	3	0.00000000
R	1.00000000	1	2	0.00000000
I	1.00000000	0	1	357.40000000
C	0.00003000	3	0	
R	62.25800000	3	0	68.89200000
L	8558.00000000	2	0	0.00000000

WCAP - WLNO T3 OC Self analysis 03242010

WCAP OUTPUT AT FREQUENCY: 1.060 MHz

NODE VOLTAGES

Node:	1	101.6695 ∡	51.0504° V
Node:	2	101.0800 ∡	51.5069° V
Node:	3	88.0155 ∡	45.0625° V

WCAP PART		CURRENT IN	CURRENT OUT

	WCAP PART		BRANCH VOLTAGE	BRANCH CURRENT
L	2→3	2.53000000	16.83 ∡ 87.460° V	1.00 ∡ -2.540° A
R	1→2	1.00000000	1.00 ∡ -2.600° V	1.00 ∡ -2.600° A
C	3→0	0.00003000	88.02 ∡ 45.062° V	0.02 ∡ 135.062° A
R	3→0	57.90700000	88.02 ∡ 45.062° V	1.01 ∡ -3.212° A
L	2→0	8558.00000000	101.08 ∡ 51.507° V	0.00 ∡ -38.493° A

	WCAP PART		FROM IMPEDANCE	TO IMPEDANCE
L	2→3	2.53000000	59.43 + j 81.942	59.43 + j 65.092
R	1→2	1.00000000	60.26 + j 81.886	59.26 + j 81.886
C	3→0	0.00003000	0.00 - j 5004.872	0.00 + j 0.000
R	3→0	57.90700000	57.91 + j 64.935	0.00 + j 0.000
L	2→0	8558.00000000	0.00 + j 56997.790	0.00 + j 0.000

WCAP PART	VSWR

WCAP INPUT DATA:

	1.0600	0.00001000	1	
L	2.53000000	2	3	0.00000000
R	1.00000000	1	2	0.00000000
I	1.00000000	0	1	357.40000000
C	0.00003000	3	0	
R	57.90700000	3	0	64.93500000
L	8558.00000000	2	0	0.00000000

WCAP - WLNO T4 OC Self analysis 032410

WCAP OUTPUT AT FREQUENCY: 1.060 MHz

NODE VOLTAGES

Node:	1	97.8792 ∡	47.7920° V
Node:	2	97.2447 ∡	48.2459° V
Node:	3	88.9646 ∡	43.7455° V

WCAP PART		CURRENT IN	CURRENT OUT

	WCAP PART		BRANCH VOLTAGE	BRANCH CURRENT
L	2→3	1.66000000	11.04 ∡ 87.462° V	1.00 ∡ -2.538° A
R	1→2	1.00000000	1.00 ∡ -2.600° V	1.00 ∡ -2.600° A
C	3→0	0.00003000	88.96 ∡ 43.745° V	0.02 ∡ 133.745° A
R	3→0	60.00100000	88.96 ∡ 43.745° V	1.01 ∡ -3.234° A
L	2→0	8558.00000000	97.24 ∡ 48.246° V	0.00 ∡ -41.754° A

	WCAP PART		FROM IMPEDANCE	TO IMPEDANCE
L	2→3	1.66000000	61.56 + j 75.442	61.56 + j 64.386
R	1→2	1.00000000	62.40 + j 75.409	61.40 + j 75.409
C	3→0	0.00003000	0.00 - j 5004.872	0.00 + j 0.000
R	3→0	60.00100000	60.00 + j 64.297	0.00 + j 0.000
L	2→0	8558.00000000	0.00 + j 56997.790	0.00 + j 0.000

WCAP PART	VSWR

WCAP INPUT DATA:

	1.0600	0.00001000	1	
L	1.66000000	2	3	0.00000000
R	1.00000000	1	2	0.00000000
I	1.00000000	0	1	357.40000000
C	0.00003000	3	0	
R	60.00100000	3	0	64.29700000
L	8558.00000000	2	0	0.00000000

WCAP - WLNO T5 OC Self analysis 032410

WCAP OUTPUT AT FREQUENCY: 1.060 MHz

NODE VOLTAGES

Node:	1	98.2833 ∡	47.1134° V
Node:	2	97.6396 ∡	47.5610° V
Node:	3	90.6448 ∡	43.7555° V

WCAP PART		CURRENT IN	CURRENT OUT

	WCAP PART		BRANCH VOLTAGE	BRANCH CURRENT
L	2→3	1.41000000	9.38 ∡ 87.463° V	1.00 ∡ -2.537° A
R	1→2	1.00000000	1.00 ∡ -2.600° V	1.00 ∡ -2.600° A
C	3→0	0.00003000	90.64 ∡ 43.755° V	0.02 ∡ 133.755° A
R	3→0	61.09400000	90.64 ∡ 43.755° V	1.01 ∡ -3.246° A
L	2→0	8558.00000000	97.64 ∡ 47.561° V	0.00 ∡ -42.439° A

	WCAP PART		FROM IMPEDANCE	TO IMPEDANCE
L	2→3	1.41000000	62.72 + j 75.002	62.72 + j 65.611
R	1→2	1.00000000	63.55 + j 74.972	62.55 + j 74.972
C	3→0	0.00003000	0.00 - j 5004.872	0.00 + j 0.000
R	3→0	61.09400000	61.09 + j 65.518	0.00 + j 0.000
L	2→0	8558.00000000	0.00 + j 56997.790	0.00 + j 0.000

WCAP PART	VSWR

WCAP INPUT DATA:

	1.0600	0.00001000	1	
L	1.41000000	2	3	0.00000000
R	1.00000000	1	2	0.00000000
I	1.00000000	0	1	357.40000000
C	0.00003000	3	0	
R	61.09400000	3	0	65.51800000
L	8558.00000000	2	0	0.00000000

WCAP - WLNO T6 OC Self analysis 03242010

WCAP OUTPUT AT FREQUENCY: 1.060 MHz

NODE VOLTAGES

Node:	1	103.2881 ∡	48.9576° V
Node:	2	102.6694 ∡	49.3947° V
Node:	3	90.6391 ∡	43.1609° V

WCAP PART		CURRENT IN	CURRENT OUT

	WCAP PART		BRANCH VOLTAGE	BRANCH CURRENT
L	2→3	2.40000000	15.96 ∡ 87.464° V	1.00 ∡ -2.536° A
R	1→2	1.00000000	1.00 ∡ -2.600° V	1.00 ∡ -2.600° A
C	3→0	0.00003000	90.64 ∡ 43.161° V	0.02 ∡ 133.161° A
R	3→0	61.77300000	90.64 ∡ 43.161° V	1.01 ∡ -3.253° A
L	2→0	8558.00000000	102.67 ∡ 49.395° V	0.00 ∡ -40.605° A

	WCAP PART		FROM IMPEDANCE	TO IMPEDANCE
L	2→3	2.40000000	63.40 + j 80.943	63.40 + j 64.959
R	1→2	1.00000000	64.22 + j 80.899	63.22 + j 80.899
C	3→0	0.00003000	0.00 - j 5004.872	0.00 + j 0.000
R	3→0	61.77300000	61.77 + j 64.899	0.00 + j 0.000
L	2→0	8558.00000000	0.01 + j 56997.790	0.00 + j 0.000

WCAP PART	VSWR

WCAP INPUT DATA:

	1.0600	0.00001000	1	
L	2.40000000	2	3	0.00000000
R	1.00000000	1	2	0.00000000
I	1.00000000	0	1	357.40000000
C	0.00003000	3	0	
R	61.77300000	3	0	64.89900000
L	8558.00000000	2	0	0.00000000

WCAP - WLNO T7 OC Self analysis 03242010

WCAP OUTPUT AT FREQUENCY: 1.060 MHz

NODE VOLTAGES

Node:	1	101.0026 ∡	53.7085° V
Node:	2	100.4513 ∡	54.1830° V
Node:	3	81.0114 ∡	44.5907° V

WCAP PART		CURRENT IN	CURRENT OUT

	WCAP PART		BRANCH VOLTAGE	BRANCH CURRENT
L	2→3	3.70000000	24.61 ∡ 87.455° V	1.00 ∡ -2.545° A
R	1→2	1.00000000	1.00 ∡ -2.600° V	1.00 ∡ -2.600° A
C	3→0	0.00003000	81.01 ∡ 44.591° V	0.02 ∡ 134.591° A
R	3→0	53.89600000	81.01 ∡ 44.591° V	1.01 ∡ -3.169° A
L	2→0	8558.00000000	100.45 ∡ 54.183° V	0.00 ∡ -35.817° A

	WCAP PART		FROM IMPEDANCE	TO IMPEDANCE
L	2→3	3.70000000	55.19 + j 84.109	55.19 + j 59.466
R	1→2	1.00000000	56.03 + j 84.038	55.03 + j 84.038
C	3→0	0.00003000	0.00 - j 5004.872	0.00 + j 0.000
R	3→0	53.89600000	53.90 + j 59.355	0.00 + j 0.000
L	2→0	8558.00000000	-0.00 + j 56997.790	0.00 + j 0.000

WCAP PART	VSWR

WCAP INPUT DATA:

	1.0600	0.00001000	1	
L	3.70000000	2	3	0.00000000
R	1.00000000	1	2	0.00000000
I	1.00000000	0	1	357.40000000
C	0.00003000	3	0	
R	53.89600000	3	0	59.35500000
L	8558.00000000	2	0	0.00000000

VERIFICATION OF METHOD OF MOMENTS MODEL

WLNO, 1060 kHz, 5.0/50.0 kW, DA-2
New Orleans, Louisiana

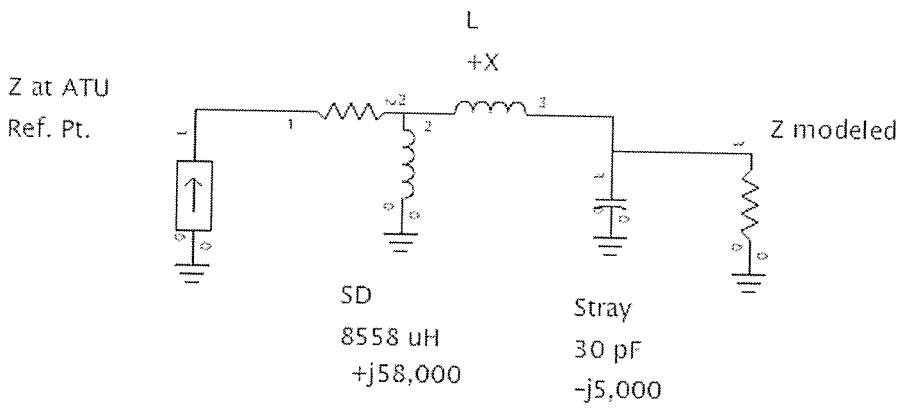

TWR	L(uH)	XL	Xoc	Z modeled	Z ATU (model)	Z ATU (msrd)
1	1.34	+j 8.93	-j 5000	62.62 +j 69.34	64.20 +j 78.38	64.32 +j 78.38
2	0.95	+j 6.33	-j 5000	62.26 +j 68.89	63.83 +j 75.35	64.04 +j 75.48
3	2.53	+j 16.9	-j 5000	57.91 +j 64.94	59.26 +j 81.88	59.13 +j 81.90
4	1.66	+j 11.1	-j 5000	60.00 +j 64.30	61.40 +j 75.41	61.94 +j 75.39
5	1.41	+j 9.39	-j 5000	61.09 +j 65.52	62.55 +j 74.97	62.81 +j 74.70
6	2.40	+j 16.0	-j 5000	61.77 +j 64.90	63.22 +j 80.90	63.15 +j 80.90
7	3.70	+j 24.6	-j 5000	53.90 +j 59.36	55.03 +j 84.04	54.93 +j 84.00

WLNO - DA-DAY Operating Parameter Determination - Exhibit 2

After converging the model with the measured open-circuit self impedance for each tower in the array, the model was used to make the directional antenna calculations.

The model calculated the voltage values for the source point of each tower in the array, as well as the tower currents. The summation of current moments, when normalized, equate to the theoretical field parameters which produce the directional pattern.

The ATU output currents were calculated using WCAP nodal analysis. WCAP input data consists of:

- Tower currents calculated using the method of moments model for the directional antenna.
- Tower operating impedances calculated by the method of moments for the directional antenna. In WCAP these are treated as a complex load from node 3 to ground.
- The circuit values which were derived from analysis of the measured open-circuit self impedances.

The WCAP nomenclature, in the following tabulations are defined as:

- Node 2 is the ATU Reference Point (where the TCT sampler is located).
- Node 3 is the tower feedpoint.
- Node 0 is ground potential.
- Node 1>2 is a phantom 1.0 ohm resistor.
- Node 2>3 is the assumed series reactance.
- Node 3>0 is both the assumed shunt capacitance of base insulator & strays, as well as a resistor that represents the complex load presented by the tower.
- "TO IMPEDANCE" is the impedance from one node to the following node.

Since the TCT samplers and the sampling lines are near identical, the antenna monitor ratios and phases corresponding to the theoretical parameters were calculated directly from the modeled ATU currents.

WLNO - DA-DAY Operating Parameter Determination - Exhibit 2

WLNO, 1060 kHz, 5.0/50.0 kW, DA-2

New Orleans, Louisiana

TOWER	Modeled Current Node	Current Magnitude @ TCT in amps	Current Phase @ TCT in degrees	Antenna Monitor Ratio	Antenna Monitor Phase in deg
3	21	21.47	+98.60	1.068	+86.9
7	61	20.11	+11.75	1.000	0.0

WCAP - WLNO T3 DA-Day 02152010

WCAP OUTPUT AT FREQUENCY: 1.060 MHz

NODE VOLTAGES

Node:	1	1910.4963 ∡	169.3051° V
Node:	2	1903.5643 ∡	169.8997° V
Node:	3	1518.0583 ∡	164.7944° V

WCAP PART		CURRENT IN	CURRENT OUT

	WCAP PART		BRANCH VOLTAGE	BRANCH CURRENT
L	2→3	2.97000000	414.18 ∡ -171.065° V	20.94 ∡ 98.935° A
R	1→2	1.00000000	20.97 ∡ 98.906° V	20.97 ∡ 98.906° A
C	3→0	0.00003000	1518.06 ∡ 164.794° V	0.30 ∡ -105.206° A
R	3→0	28.88200000	1518.06 ∡ 164.794° V	21.22 ∡ 98.600° A
L	2→0	8558.00000000	1903.56 ∡ 169.900° V	0.03 ∡ 79.900° A

	WCAP PART		FROM IMPEDANCE	TO IMPEDANCE
L	2→3	2.97000000	29.65 + j 85.941	29.65 + j 66.160
R	1→2	1.00000000	30.56 + j 85.827	29.56 + j 85.827
C	3→0	0.00003000	0.00 - j 5004.872	0.00 + j 0.000
R	3→0	28.88200000	28.88 + j 65.466	0.00 + j 0.000
L	2→0	8558.00000000	0.00 + j 56997.790	0.00 + j 0.000

WCAP PART	VSWR

WCAP INPUT DATA:

	1.0600	0.00001000	1	
L	2.97000000	2	3	0.00000000
R	1.00000000	1	2	0.00000000
I	20.97000000	0	1	98.90560000
C	0.00003000	3	0	
R	28.88200000	3	0	65.46600000
L	8558.00000000	2	0	0.00000000

WCAP - WLNO T7 DA-Day 02152010

WCAP OUTPUT AT FREQUENCY: 1.060 MHz

NODE VOLTAGES

Node:	1	2430.5379 ∡	52.4109° V
Node:	2	2415.1900 ∡	52.7422° V
Node:	3	2072.3003 ∡	40.9904° V

WCAP PART		CURRENT IN	CURRENT OUT

WCAP PART		BRANCH VOLTAGE	BRANCH CURRENT
L	2→3	4.14000000	572.18 ∡ 100.274° V	20.75 ∡ 10.274° A
R	1→2	1.00000000	20.78 ∡ 10.188° V	20.78 ∡ 10.188° A
C	3→0	0.00003000	2072.30 ∡ 40.990° V	0.41 ∡ 130.990° A
R	3→0	84.10500000	2072.30 ∡ 40.990° V	20.97 ∡ 9.301° A
L	2→0	8558.00000000	2415.19 ∡ 52.742° V	0.04 ∡ -37.258° A

WCAP PART		FROM IMPEDANCE	TO IMPEDANCE
L	2→3	4.14000000	85.85 + j 78.583	85.85 + j 51.009
R	1→2	1.00000000	86.62 + j 78.603	85.62 + j 78.603
C	3→0	0.00003000	0.00 - j 5004.872	0.00 + j 0.000
R	3→0	84.10500000	84.11 + j 51.923	0.00 + j 0.000
L	2→0	8558.00000000	0.00 + j 56997.790	0.00 + j 0.000

WCAP PART	VSWR

WCAP INPUT DATA:

	1.0600	0.00001000	1	
L	4.14000000	2	3	0.00000000
R	1.00000000	1	2	0.00000000
I	20.78000000	0	1	10.18760000
C	0.00003000	3	0	
R	84.10500000	3	0	51.92300000
L	8558.00000000	2	0	0.00000000

WLNO - DA-NIGHT Operating Parameter Determination - Exhibit 3

After converging the model with the measured open-circuit self impedance for each tower in the array, the model was used to make the directional antenna calculations.

The model calculated the voltage values for the source point of each tower in the array, as well as the tower currents. The summation of current moments, when normalized, equate to the theoretical field parameters which produce the directional pattern.

The ATU output currents were calculated using WCAP nodal analysis. WCAP input data consists of:

- Tower currents calculated using the method of moments model for the directional antenna.
- Tower operating impedances calculated by the method of moments for the directional antenna. In WCAP these are treated as a complex load from node 3 to ground.
- The circuit values which were derived from analysis of the measured open-circuit self impedances.

The WCAP nomenclature, in the following tabulations are defined as:

- Node 2 is the ATU Reference Point (where the TCT sampler is located.
- Node 3 is the tower feedpoint.
- Node 0 is ground potential.
- Node 1>2 is a phantom 1.0 ohm resistor.
- Node 2>3 is the assumed series reactance.
- Node 3>0 is both the assumed shunt capacitance of base insulator & strays, as well as a resistor that represents the complex load presented by the tower.
- "TO IMPEDANCE" is the impedance from one node to the following node.

Since the TCT samplers and the sampling lines are identical, the antenna monitor ratios and phases corresponding to the theoretical parameters were calculated directly from the modeled ATU currents.

WLNO - DA-NIGHT Operating Parameter Determination - Exhibit 3

WLNO, 1060 kHz, 5.0/50.0 kW, DA-2

New Orleans, Louisiana

TOWER	Modeled Current Node	Current Magnitude @ TCT in amps	Current Phase @ TCT in degrees	Antenna Monitor Ratio	Antenna Monitor Phase in deg
1	1	3.52	+1.92	0.494	-5.4
2	11	7.12	+7.35	1.000	00.0
3	21	3.80	+7.78	0.488	+0.43
4	31	3.24	+82.35	0.455	+75.0
5	41	6.65	+87.30	0.934	+80.0
6	51	3.55	+92.90	0.499	+85.6

WCAP - WLNO T1 DA-Night base area 32510

WCAP OUTPUT AT FREQUENCY: 1.060 MHz

NODE VOLTAGES

Node:	1	219.6162 ∡	71.7510° V
Node:	2	218.4275 ∡	72.6177° V
Node:	3	189.3146 ∡	69.4969° V

WCAP PART		CURRENT IN	CURRENT OUT

	WCAP PART		BRANCH VOLTAGE	BRANCH CURRENT
L	2→3	1.33000000	31.15 ∡ 91.941° V	3.52 ∡ 1.941° A
R	1→2	1.00000000	3.52 ∡ 1.920° V	3.52 ∡ 1.920° A
C	3→0	0.00003000	189.31 ∡ 69.497° V	0.04 ∡ 159.497° A
R	3→0	20.15100000	189.31 ∡ 69.497° V	3.55 ∡ 1.708° A
L	2→0	8558.00000000	218.43 ∡ 72.618° V	0.00 ∡ -17.382° A

	WCAP PART		FROM IMPEDANCE	TO IMPEDANCE
L	2→3	1.33000000	20.55 + j 58.618	20.55 + j 49.760
R	1→2	1.00000000	21.51 + j 58.565	20.51 + j 58.565
C	3→0	0.00003000	0.00 - j 5004.872	0.00 + j 0.000
R	3→0	20.15100000	20.15 + j 49.352	0.00 + j 0.000
L	2→0	8558.00000000	0.00 + j 56997.790	0.00 + j 0.000

WCAP PART	VSWR

WCAP INPUT DATA:

	1.0600	0.00001000	1	
L	1.33000000	2	3	0.00000000
R	1.00000000	1	2	0.00000000
I	3.52000000	0	1	1.92000000
C	0.00003000	3	0	
R	20.15100000	3	0	49.35200000
L	8558.00000000	2	0	0.00000000

WCAP - WLNO T2 DA-Night base area 32510

WCAP OUTPUT AT FREQUENCY: 1.060 MHz

NODE VOLTAGES

Node:	1	366.6454 ∡	71.4681° V
Node:	2	363.5938 ∡	72.4776° V
Node:	3	323.3189 ∡	69.1180° V

WCAP PART		CURRENT IN	CURRENT OUT

WCAP PART		BRANCH VOLTAGE	BRANCH CURRENT
L 2→3	0.95000000	45.01 ∡ 97.372° V	7.11 ∡ 7.372° A
R 1→2	1.00000000	7.12 ∡ 7.350° V	7.12 ∡ 7.350° A
C 3→0	0.00003000	323.32 ∡ 69.118° V	0.06 ∡ 159.118° A
R 3→0	21.17300000	323.32 ∡ 69.118° V	7.17 ∡ 7.127° A
L 2→0	8558.00000000	363.59 ∡ 72.478° V	0.01 ∡ -17.522° A

WCAP PART		FROM IMPEDANCE	TO IMPEDANCE
L 2→3	0.95000000	21.51 + j 46.360	21.51 + j 40.032
R 1→2	1.00000000	22.48 + j 46.330	21.48 + j 46.330
C 3→0	0.00003000	0.00 - j 5004.872	0.00 + j 0.000
R 3→0	21.17300000	21.17 + j 39.805	0.00 + j 0.000
L 2→0	8558.00000000	0.00 + j 56997.790	0.00 + j 0.000

WCAP PART	VSWR

WCAP INPUT DATA:

	1.0600	0.00001000	1	
L	0.95000000	2	3	0.00000000
R	1.00000000	1	2	0.00000000
I	7.12000000	0	1	7.35000000
C	0.00003000	3	0	
R	21.17300000	3	0	39.80500000
L	8558.00000000	2	0	0.00000000

WCAP - WLNO T3 DA-Night base area 32510

WCAP OUTPUT AT FREQUENCY: 1.060 MHz

NODE VOLTAGES

Node:	1	124.6372 ∡	99.2585° V
Node:	2	124.7933 ∡	101.0052° V
Node:	3	60.9235 ∡	104.3995° V

WCAP PART		CURRENT IN	CURRENT OUT

	WCAP PART		BRANCH VOLTAGE	BRANCH CURRENT
L	2→3	2.53000000	64.08 ∡ 97.778° V	3.80 ∡ 7.778° A
R	1→2	1.00000000	3.81 ∡ 7.780° V	3.81 ∡ 7.780° A
C	3→0	0.00003000	60.92 ∡ 104.399° V	0.01 ∡ -165.601° A
R	3→0	-1.83560000	60.92 ∡ 104.399° V	3.81 ∡ 7.799° A
L	2→0	8558.00000000	124.79 ∡ 101.005° V	0.00 ∡ 11.005° A

	WCAP PART		FROM IMPEDANCE	TO IMPEDANCE
L	2→3	2.53000000	-1.85 + j 32.764	-1.85 + j 15.914
R	1→2	1.00000000	-0.85 + j 32.745	-1.85 + j 32.745
C	3→0	0.00003000	0.00 - j 5004.872	0.00 + j 0.000
R	3→0	-1.83560000	-1.84 + j 15.864	0.00 + j 0.000
L	2→0	8558.00000000	0.00 + j 56997.790	0.00 + j 0.000

WCAP PART	VSWR

WCAP INPUT DATA:

	1.0600	0.00001000	1	
L	2.53000000	2	3	0.00000000
R	1.00000000	1	2	0.00000000
I	3.80500000	0	1	7.78000000
C	0.00003000	3	0	
R	-1.83560000	3	0	15.86400000
L	8558.00000000	2	0	0.00000000

WCAP - WLNO T4 DA-Night base area 32510

WCAP OUTPUT AT FREQUENCY: 1.060 MHz

NODE VOLTAGES

Node:	1	392.8660 ∡	141.6214° V
Node:	2	391.2204 ∡	142.0293° V
Node:	3	360.8285 ∡	139.1566° V

WCAP PART			CURRENT IN	CURRENT OUT

	WCAP PART		BRANCH VOLTAGE	BRANCH CURRENT
L	2→3	1.66000000	35.76 ∡ 172.411° V	3.23 ∡ 82.411° A
R	1→2	1.00000000	3.24 ∡ 82.350° V	3.24 ∡ 82.350° A
C	3→0	0.00003000	360.83 ∡ 139.157° V	0.07 ∡ -130.843° A
R	3→0	58.95400000	360.83 ∡ 139.157° V	3.29 ∡ 81.724° A
L	2→0	8558.00000000	391.22 ∡ 142.029° V	0.01 ∡ 52.029° A

	WCAP PART		FROM IMPEDANCE	TO IMPEDANCE
L	2→3	1.66000000	61.18 + j 104.356	61.18 + j 93.300
R	1→2	1.00000000	61.96 + j 104.230	60.96 + j 104.230
C	3→0	0.00003000	-0.00 - j 5004.872	0.00 + j 0.000
R	3→0	58.95400000	58.95 + j 92.300	0.00 + j 0.000
L	2→0	8558.00000000	0.00 + j 56997.790	0.00 + j 0.000

WCAP PART	VSWR

WCAP INPUT DATA:

	1.0600	0.00001000	1	
L	1.66000000	2	3	0.00000000
R	1.00000000	1	2	0.00000000
I	3.24000000	0	1	82.35000000
C	0.00003000	3	0	
R	58.95400000	3	0	92.30000000
L	8558.00000000	2	0	0.00000000

WCAP - WLNO T5 DA-Night base area 32510

WCAP OUTPUT AT FREQUENCY: 1.060 MHz

NODE VOLTAGES

Node:	1	666.2734 ∡	143.6487° V
Node:	2	662.6116 ∡	144.1274° V
Node:	3	611.4047 ∡	140.9236° V

WCAP PART		CURRENT IN	CURRENT OUT

	WCAP PART		BRANCH VOLTAGE	BRANCH CURRENT
L	2→3	1.41000000	62.36 ∡ 177.355° V	6.64 ∡ 87.355° A
R	1→2	1.00000000	6.65 ∡ 87.300° V	6.65 ∡ 87.300° A
C	3→0	0.00003000	611.40 ∡ 140.924° V	0.12 ∡ -129.076° A
R	3→0	53.09000000	611.40 ∡ 140.924° V	6.74 ∡ 86.738° A
L	2→0	8558.00000000	662.61 ∡ 144.127° V	0.01 ∡ 54.127° A

	WCAP PART		FROM IMPEDANCE	TO IMPEDANCE
L	2→3	1.41000000	54.68 + j 83.472	54.68 + j 74.081
R	1→2	1.00000000	55.52 + j 83.402	54.52 + j 83.402
C	3→0	0.00003000	-0.00 - j 5004.872	0.00 + j 0.000
R	3→0	53.09000000	53.09 + j 73.572	0.00 + j 0.000
L	2→0	8558.00000000	0.00 + j 56997.790	0.00 + j 0.000

WCAP PART	VSWR

WCAP INPUT DATA:

	1.0600	0.00001000	1	
L	1.41000000	2	3	0.00000000
R	1.00000000	1	2	0.00000000
I	6.65000000	0	1	87.30000000
C	0.00003000	3	0	
R	53.09000000	3	0	73.57200000
L	8558.00000000	2	0	0.00000000

WCAP - WLNO T6 DA-Night base area 32510

WCAP OUTPUT AT FREQUENCY: 1.060 MHz

NODE VOLTAGES

Node:	1	289.1428 ∡	143.4831° V
Node:	2	286.9018 ∡	144.0308° V
Node:	3	245.3994 ∡	135.6871° V

WCAP PART		CURRENT IN	CURRENT OUT

WCAP PART			BRANCH VOLTAGE	BRANCH CURRENT
L	2→3	2.40000000	56.68 ∡ -177.049° V	3.55 ∡ 92.951° A
R	1→2	1.00000000	3.55 ∡ 92.900° V	3.55 ∡ 92.900° A
C	3→0	0.00003000	245.40 ∡ 135.687° V	0.05 ∡ -134.313° A
R	3→0	49.88300000	245.40 ∡ 135.687° V	3.58 ∡ 92.375° A
L	2→0	8558.00000000	286.90 ∡ 144.031° V	0.01 ∡ 54.031° A

WCAP PART			FROM IMPEDANCE	TO IMPEDANCE
L	2→3	2.40000000	50.83 + j 62.947	50.83 + j 46.963
R	1→2	1.00000000	51.72 + j 62.923	50.72 + j 62.923
C	3→0	0.00003000	0.00 - j 5004.872	0.00 + j 0.000
R	3→0	49.88300000	49.88 + j 47.028	0.00 + j 0.000
L	2→0	8558.00000000	0.00 + j 56997.790	0.00 + j 0.000

WCAP PART	VSWR

WCAP INPUT DATA:

1.0600 0.00001000 1

L	2.40000000	2	3	0.00000000
R	1.00000000	1	2	0.00000000
I	3.55000000	0	1	92.90000000
C	0.00003000	3	0	
R	49.88300000	3	0	47.02800000
L	8558.00000000	2	0	0.00000000

WLNO - Details of Model for Towers Individually Driven - Exhibit 4

Using Expert MININEC Broadcast Professional, Version 14.5, the WLNO seven tower array was modeled. Each tower was represented by one wire. The top and bottom wire end points were specified using electrical degrees for the frequency of 1060 kHz. Each tower wire was modeled based on 10 wire segments. The towers are physically 90.0 electrical degrees in height, the segment length is 9.0 electrical degrees.

The characteristics (height & radius) were adjusted until the modeled resistance approximately matched the measured resistance. Final adjustment to converge the model was made based on the introduction of a circuit model which consists of branches representing feedline inductances and stray capacitances. The base impedances were measured at the normal location of the current sampling TCTs (Reference Point) with the other towers opened circuited at their respective Reference Point. The method of moments model assumed loads at ground level having the reactances that were calculated for each case using the base circuit models for the open circuited towers of the array.

The modeled heights relative to the physical heights of the individual towers is within the specified range of 75% to 125%. The modeled radius is within the specified range of 80% to 150% of the cylindrical radius that represents the circumference equal to the sum of the tower face width. WLNO uses towers of identical, uniform cross-section, triangular towers having sides of 25.0 inches.

TOWER	Physical Height (deg)	Modeled Height (deg)	Modeled % of Height	Modeled Radius (m)	%Equivalent Radius
1	90	99.9	111.0	0.35	127.3
2	90	99.9	111.0	0.35	127.3
3	90	98.8	109.8	0.35	127.3
4	90	99.1	110.1	0.35	127.3
5	90	99.4	110.4	0.35	127.3
6	90	99.0	110.0	0.35	127.3
7	90	97.45	108.3	0.35	127.3

The following pages show the method of moments model details of the individually driven towers.

Tower 1 Self (all others OC)

GEOMETRY
Wire coordinates in degrees; other dimensions in meters
Environment: perfect ground

wire	caps	Distance	Angle	Z	radius	segs
1	none	0	0	0	.35	10
		0	0	99.9		
2	none	197.5	35.	0	.35	10
		197.5	35.	99.9		
3	none	395.	35.	0	.35	10
		395.	35.	98.8		
4	none	272.	327.5	0	.35	10
		272.	327.5	99.1		
5	none	391.5	354.9	0	.35	10
		391.5	354.9	99.4		
6	none	557.2	8.1	0	.35	10
		557.2	8.1	99.		
7	none	498.08	27.06	0	.35	10
		498.08	27.06	97.45		

Number of wires = 7
current nodes = 70

Individual wires	minimum wire	minimum value	maximum wire	maximum value
segment length	7	9.745	1	9.99
radius	1	.35	1	.35

ELECTRICAL DESCRIPTION
Frequencies (MHz)

no.	frequency lowest	step	no. of steps	segment length (wavelengths) minimum	maximum
1	1.06	0	1	.0270694	.02775

Sources

source	node	sector	magnitude	phase	type
1	1	1	1.	0	voltage

Lumped loads

load	node	resistance (ohms)	reactance (ohms)	inductance (mH)	capacitance (uF)	passive circuit
1	1	0	0	0	0	0
2	11	0	-5,000.	0	0	0
3	21	0	-5,000.	0	0	0
4	31	0	-5,000.	0	0	0
5	41	0	-5,000.	0	0	0
6	51	0	-5,000.	0	0	0
7	61	0	-5,000.	0	0	0

IMPEDANCE
normalization = 50.

freq (MHz)	resist (ohms)	react (ohms)	imped (ohms)	phase (deg)	VSWR	S11 dB	S12 dB
source = 1; node 1, sector 1							
1.06	62.618	69.335	93.425	47.9	3.2816	-5.4674	-1.4506

Tower 2 Self (all others OC)

GEOMETRY
Wire coordinates in degrees; other dimensions in meters
Environment: perfect ground

wire	caps	Distance	Angle	Z	radius	segs
1	none	0	0	0	.35	10
		0	0	99.9		
2	none	197.5	35.	0	.35	10
		197.5	35.	99.9		
3	none	395.	35.	0	.35	10
		395.	35.	98.8		
4	none	272.	327.5	0	.35	10
		272.	327.5	99.1		
5	none	391.5	354.9	0	.35	10
		391.5	354.9	99.4		
6	none	557.2	8.1	0	.35	10
		557.2	8.1	99.		
7	none	498.08	27.06	0	.35	10
		498.08	27.06	97.45		

Number of wires = 7
current nodes = 70

	minimum		maximum	
Individual wires	wire	value	wire	value
segment length	7	9.745	1	9.99
radius	1	.35	1	.35

ELECTRICAL DESCRIPTION
Frequencies (MHz)

	frequency		no. of	segment length (wavelengths)	
no.	lowest	step	steps	minimum	maximum
1	1.06	0	1	.0270694	.02775

Sources

source	node	sector	magnitude	phase	type
1	11	1	1.	0	voltage

Lumped loads

load	node	resistance (ohms)	reactance (ohms)	inductance (mH)	capacitance (uF)	passive circuit
1	1	0	-5,000.	0	0	0
2	11	0	0	0	0	0
3	21	0	-5,000.	0	0	0
4	31	0	-5,000.	0	0	0
5	41	0	-5,000.	0	0	0
6	51	0	-5,000.	0	0	0
7	61	0	-5,000.	0	0	0

IMPEDANCE
normalization = 50.

freq (MHz)	resist (ohms)	react (ohms)	imped (ohms)	phase (deg)	VSWR	S11 dB	S12 dB
source = 1; node 11, sector 1							
1.06	62.258	68.892	92.856	47.9	3.2668	-5.4938	-1.4402

Tower 3 Self (all others OC)

GEOMETRY
Wire coordinates in degrees; other dimensions in meters
Environment: perfect ground

wire	caps	Distance	Angle	Z	radius	segs
1	none	0	0	0	.35	10
		0	0	99.9		
2	none	197.5	35.	0	.35	10
		197.5	35.	99.9		
3	none	395.	35.	0	.35	10
		395.	35.	98.8		
4	none	272.	327.5	0	.35	10
		272.	327.5	99.1		
5	none	391.5	354.9	0	.35	10
		391.5	354.9	99.4		
6	none	557.2	8.1	0	.35	10
		557.2	8.1	99.		
7	none	498.08	27.06	0	.35	10
		498.08	27.06	97.45		

Number of wires = 7
current nodes = 70

	minimum		maximum	
Individual wires	wire	value	wire	value
segment length	7	9.745	1	9.99
radius	1	.35	1	.35

ELECTRICAL DESCRIPTION
Frequencies (MHz)

	frequency		no. of	segment length (wavelengths)	
no.	lowest	step	steps	minimum	maximum
1	1.06	0	1	.0270694	.02775

Sources

source	node	sector	magnitude	phase	type
1	21	1	1.	0	voltage

Lumped loads

load	node	resistance (ohms)	reactance (ohms)	inductance (mH)	capacitance (uF)	passive circuit
1	1	0	-5,000.	0	0	0
2	11	0	-5,000.	0	0	0
3	21	0	0	0	0	0
4	31	0	-5,000.	0	0	0
5	41	0	-5,000.	0	0	0
6	51	0	-5,000.	0	0	0
7	61	0	-5,000.	0	0	0

IMPEDANCE
normalization = 50.

freq (MHz)	resist (ohms)	react (ohms)	imped (ohms)	phase (deg)	VSWR	S11 dB	S12 dB
source = 1; node 21, sector 1							
1.06	57.907	64.935	87.005	48.3	3.1616	-5.6897	-1.3656

Tower 4 Self (all others OC)

GEOMETRY
Wire coordinates in degrees; other dimensions in meters
Environment: perfect ground

wire	caps	Distance	Angle	Z	radius	segs
1	none	0	0	0	.35	10
		0	0	99.9		
2	none	197.5	35.	0	.35	10
		197.5	35.	99.9		
3	none	395.	35.	0	.35	10
		395.	35.	98.8		
4	none	272.	327.5	0	.35	10
		272.	327.5	99.1		
5	none	391.5	354.9	0	.35	10
		391.5	354.9	99.4		
6	none	557.2	8.1	0	.35	10
		557.2	8.1	99.		
7	none	498.08	27.06	0	.35	10
		498.08	27.06	97.45		

Number of wires = 7
current nodes = 70

	minimum		maximum	
Individual wires	wire	value	wire	value
segment length	7	9.745	1	9.99
radius	1	.35	1	.35

ELECTRICAL DESCRIPTION
Frequencies (MHz)

	frequency		no. of	segment length (wavelengths)	
no.	lowest	step	steps	minimum	maximum
1	1.06	0	1	.0270694	.02775

Sources

source	node	sector	magnitude	phase	type
1	31	1	1.	0	voltage

Lumped loads

load	node	resistance (ohms)	reactance (ohms)	inductance (mH)	capacitance (uF)	passive circuit
1	1	0	-5,000.	0	0	0
2	11	0	-5,000.	0	0	0
3	21	0	-5,000.	0	0	0
4	31	0	0	0	0	0
5	41	0	-5,000.	0	0	0
6	51	0	-5,000.	0	0	0
7	61	0	-5,000.	0	0	0

IMPEDANCE
normalization = 50.

freq (MHz)	resist (ohms)	react (ohms)	imped (ohms)	phase (deg)	VSWR	S11 dB	S12 dB
source = 1; node 31, sector 1							
1.06	60.001	64.297	87.944	47.	3.0874	-5.8367	-1.3124

Tower 5 Self (all others OC)

GEOMETRY
Wire coordinates in degrees; other dimensions in meters
Environment: perfect ground

wire	caps	Distance	Angle	Z	radius	segs
1	none	0	0	0	.35	10
		0	0	99.9		
2	none	197.5	35.	0	.35	10
		197.5	35.	99.9		
3	none	395.	35.	0	.35	10
		395.	35.	98.8		
4	none	272.	327.5	0	.35	10
		272.	327.5	99.1		
5	none	391.5	354.9	0	.35	10
		391.5	354.9	99.4		
6	none	557.2	8.1	0	.35	10
		557.2	8.1	99.		
7	none	498.08	27.06	0	.35	10
		498.08	27.06	97.45		

Number of wires = 7
current nodes = 70

	minimum		maximum	
Individual wires	wire	value	wire	value
segment length	7	9.745	1	9.99
radius	1	.35	1	.35

ELECTRICAL DESCRIPTION
Frequencies (MHz)

	frequency		no. of	segment length (wavelengths)	
no.	lowest	step	steps	minimum	maximum
1	1.06	0	1	.0270694	.02775

Sources

source	node	sector	magnitude	phase	type
1	41	1	1.	0	voltage

Lumped loads

load	node	resistance (ohms)	reactance (ohms)	inductance (mH)	capacitance (uF)	passive circuit
1	1	0	-5,000.	0	0	0
2	11	0	-5,000.	0	0	0
3	21	0	-5,000.	0	0	0
4	31	0	-5,000.	0	0	0
5	41	0	0	0	0	0
6	51	0	-5,000.	0	0	0
7	61	0	-5,000.	0	0	0

IMPEDANCE
normalization = 50.

freq (MHz)	resist (ohms)	react (ohms)	imped (ohms)	phase (deg)	VSWR	S11 dB	S12 dB
source = 1; node 41, sector 1							
1.06	61.094	65.518	89.583	47.	3.1256	-5.7601	-1.3398

Tower 6 Self (all others OC)

GEOMETRY
Wire coordinates in degrees; other dimensions in meters
Environment: perfect ground

wire	caps	Distance	Angle	Z	radius	segs
1	none	0	0	0	.35	10
		0	0	99.9		
2	none	197.5	35.	0	.35	10
		197.5	35.	99.9		
3	none	395.	35.	0	.35	10
		395.	35.	98.8		
4	none	272.	327.5	0	.35	10
		272.	327.5	99.1		
5	none	391.5	354.9	0	.35	10
		391.5	354.9	99.4		
6	none	557.2	8.1	0	.35	10
		557.2	8.1	99.		
7	none	498.08	27.06	0	.35	10
		498.08	27.06	97.45		

Number of wires = 7
current nodes = 70

	minimum		maximum	
Individual wires	wire	value	wire	value
segment length	7	9.745	1	9.99
radius	1	.35	1	.35

ELECTRICAL DESCRIPTION
Frequencies (MHz)

	frequency		no. of	segment length (wavelengths)	
no.	lowest	step	steps	minimum	maximum
1	1.06	0	1	.0270694	.02775

Sources

source	node	sector	magnitude	phase	type
1	51	1	1.	0	voltage

Lumped loads

load	node	resistance (ohms)	reactance (ohms)	inductance (mH)	capacitance (uF)	passive circuit
1	1	0	-5,000.	0	0	0
2	11	0	-5,000.	0	0	0
3	21	0	-5,000.	0	0	0
4	31	0	-5,000.	0	0	0
5	41	0	-5,000.	0	0	0
6	51	0	0	0	0	0
7	61	0	-5,000.	0	0	0

IMPEDANCE
normalization = 50.

freq (MHz)	resist (ohms)	react (ohms)	imped (ohms)	phase (deg)	VSWR	S11 dB	S12 dB
source = 1; node 51, sector 1							
1.06	61.773	64.899	89.598	46.4	3.0843	-5.8431	-1.3102

Tower 7 Self (all others OC)

GEOMETRY
Wire coordinates in degrees; other dimensions in meters
Environment: perfect ground

wire	caps	Distance	Angle	Z	radius	segs
1	none	0	0	0	.35	10
		0	0	99.9		
2	none	197.5	35.	0	.35	10
		197.5	35.	99.9		
3	none	395.	35.	0	.35	10
		395.	35.	98.8		
4	none	272.	327.5	0	.35	10
		272.	327.5	99.1		
5	none	391.5	354.9	0	.35	10
		391.5	354.9	99.4		
6	none	557.2	8.1	0	.35	10
		557.2	8.1	99.		
7	none	498.08	27.06	0	.35	10
		498.08	27.06	97.45		

Number of wires = 7
current nodes = 70

	minimum		maximum	
Individual wires	wire	value	wire	value
segment length	7	9.745	1	9.99
radius	1	.35	1	.35

ELECTRICAL DESCRIPTION
Frequencies (MHz)

	frequency		no. of	segment length (wavelengths)	
no.	lowest	step	steps	minimum	maximum
1	1.06	0	1	.0270694	.02775

Sources

source	node	sector	magnitude	phase	type
1	61	1	1.	0	voltage

Lumped loads

load	node	resistance (ohms)	reactance (ohms)	inductance (mH)	capacitance (uF)	passive circuit
1	1	0	-5,000.	0	0	0
2	11	0	-5,000.	0	0	0
3	21	0	-5,000.	0	0	0
4	31	0	-5,000.	0	0	0
5	41	0	-5,000.	0	0	0
6	51	0	-5,000.	0	0	0
7	61	0	0	0	0	0

IMPEDANCE
normalization = 50.

freq (MHz)	resist (ohms)	react (ohms)	imped (ohms)	phase (deg)	VSWR	S11 dB	S12 dB
source = 1; node 61, sector 1							
1.06	53.896	59.355	80.173	47.8	2.9771	-6.0708	-1.2328

WLNO - Details of Model for DA-DAY - Exhibit 5

Using Expert MININEC Broadcast Professional, Version 14.5, with the individual tower's characteristics that were verified by the individual tower impedance measurements. Calculations were made to determine the complex voltage values for sources located at ground level under each tower of the array to produce current moment sums for the towers that, when normalized, equated to the theoretical field parameters of the authorized directional antenna pattern.

Towers 1, 2, 4, 5 and 6 of the array, which are not used by the daytime pattern, were detuned by terminating each of these towers with a parallel circuit of .002 uF and 11.27 uH, shown at each base (nodes 1, 11, 31, 41 and 51 respectively) in the tabulation. These values provide an impedance that inhibits current flow for the method of moments modeled operating impedance in the directional antenna with a field ratios of 0.0 specified for Towers 1, 2, 4, 5 and 6.

Tower	Wire	Base Node
1	1	1
2	2	11
3	3	21
4	4	31
5	5	41
6	6	51
7	7	61

It should be noted that voltages and currents shown on the tabulations that are not specified as "rms" values are the corresponding peak values.

WLNO Full Daytime Model

MEDIUM WAVE ARRAY SYNTHESIS FROM FIELD RATIOS

Frequency = 1.06 MHz

tower	field ratio magnitude	phase (deg)
1	1.E-05	0
2	1.E-05	0
3	1.	95.
4	1.E-05	0
5	1.E-05	0
6	1.E-05	0
7	1.	0

VOLTAGES AND CURRENTS - rms

source node	voltage magnitude	phase (deg)	current magnitude	phase (deg)
1	77.0922	181.8	.173814	271.2
11	161.787	355.6	.356147	85.7
21	1,314.26	162.1	21.363	98.1
31	169.897	86.4	.384426	175.2
41	482.416	211.8	1.0838	300.7
51	803.984	248.9	1.7887	337.9
61	2,299.77	47.7	20.8849	9.3

Sum of square of source currents = 1,794.47
Total power = 50,000. watts

TOWER ADMITTANCE MATRIX

admittance	real (mhos)	imaginary (mhos)
Y(1, 1)	.00687857	-.00839305
Y(1, 2)	.000865087	-.00197091
Y(1, 3)	5.4565E-05	.00181261
Y(1, 4)	-.00242818	-.0020514
Y(1, 5)	-.000655861	.00074108
Y(1, 6)	.00162802	.000101205
Y(1, 7)	.00140478	.000776472
Y(2, 1)	.000865089	-.00197091
Y(2, 2)	.00664528	-.00822494
Y(2, 3)	.00108018	-.00178032
Y(2, 4)	-.00226187	-.00257042
Y(2, 5)	-.00291916	-.00176449
Y(2, 6)	-.00162695	.000909108
Y(2, 7)	-.00173166	-7.5881E-05
Y(3, 1)	5.4568E-05	.00181261
Y(3, 2)	.0010802	-.0017803
Y(3, 3)	.00727839	-.00809521
Y(3, 4)	-.00147163	.000974573
Y(3, 5)	-.00214726	-.00308858
Y(3, 6)	-.00128015	-.00208407
Y(3, 7)	.00289013	.000306985
Y(4, 1)	-.00242817	-.00205141
Y(4, 2)	-.00226185	-.00257043
Y(4, 3)	-.00147164	.00097457
Y(4, 4)	.00691772	-.00874089
Y(4, 5)	.00161122	-.00113812
Y(4, 6)	-.000286886	.00208288
Y(4, 7)	-.000707913	.00162981
Y(5, 1)	-.000655865	.000741071

Y(5, 2)	-.00291915	-.00176449
Y(5, 3)	-.00214727	-.00308857
Y(5, 4)	.00161122	-.00113813
Y(5, 5)	.00618451	-.00881295
Y(5, 6)	.000720612	-.00290388
Y(5, 7)	-.000824396	-.00311126
Y(6, 1)	.00162802	.000101199
Y(6, 2)	-.00162695	.000909104
Y(6, 3)	-.00128015	-.00208405
Y(6, 4)	-.00028688	.00208287
Y(6, 5)	.000720625	-.00290387
Y(6, 6)	.00856156	-.0102219
Y(6, 7)	.00312002	-.00370095
Y(7, 1)	.00140477	.000776476
Y(7, 2)	-.00173166	-7.5898E-05
Y(7, 3)	.00289013	.000307079
Y(7, 4)	-.000707923	.00162979
Y(7, 5)	-.000824326	-.00311126
Y(7, 6)	.0031201	-.0037009
Y(7, 7)	.00935004	-.0086293

TOWER IMPEDANCE MATRIX

impedance	real (ohms)	imaginary (ohms)
Z(1, 1)	62.479	69.4554
Z(1, 2)	-21.3513	-14.9577
Z(1, 3)	12.7873	7.6898
Z(1, 4)	-16.7919	9.62567
Z(1, 5)	13.1226	6.12848
Z(1, 6)	-7.71143	-5.72663
Z(1, 7)	3.28345	-10.9125
Z(2, 1)	-21.3512	-14.9577
Z(2, 2)	62.1539	69.0494
Z(2, 3)	-20.1249	-14.8984
Z(2, 4)	-16.6082	7.72659
Z(2, 5)	-17.7644	9.2557
Z(2, 6)	12.4739	5.34207
Z(2, 7)	-7.80095	16.9191
Z(3, 1)	12.7873	7.68972
Z(3, 2)	-20.1251	-14.8982
Z(3, 3)	57.9596	64.8506
Z(3, 4)	10.3916	8.10792
Z(3, 5)	-15.3192	7.60753
Z(3, 6)	-15.8642	10.9344
Z(3, 7)	9.70079	-33.6883
Z(4, 1)	-16.7918	9.62575
Z(4, 2)	-16.6082	7.72672
Z(4, 3)	10.3916	8.10793
Z(4, 4)	59.9386	64.4735
Z(4, 5)	-20.2798	-14.519
Z(4, 6)	12.4703	7.92698
Z(4, 7)	11.1625	-2.60471
Z(5, 1)	13.1226	6.12845
Z(5, 2)	-17.7645	9.25574
Z(5, 3)	-15.3191	7.60741
Z(5, 4)	-20.2797	-14.5191
Z(5, 5)	60.9867	65.7443
Z(5, 6)	-20.579	-15.1736
Z(5, 7)	-15.6095	8.74813
Z(6, 1)	-7.71145	-5.72659
Z(6, 2)	12.474	5.34202

Z(6, 3)	-15.8643	10.9344
Z(6, 4)	12.4703	7.92697
Z(6, 5)	-20.579	-15.1735
Z(6, 6)	61.5211	64.9755
Z(6, 7)	-13.87	-20.1585
Z(7, 1)	3.28336	-10.9125
Z(7, 2)	-7.80068	16.9192
Z(7, 3)	9.70002	-33.6884
Z(7, 4)	11.1625	-2.60475
Z(7, 5)	-15.6094	8.74834
Z(7, 6)	-13.8703	-20.1582
Z(7, 7)	54.0473	59.0836

WLNO Full Daytime Model

GEOMETRY
Wire coordinates in degrees; other dimensions in meters
Environment: perfect ground

wire	caps	Distance	Angle	Z	radius	segs
1	none	0	0	0	.35	10
		0	0	99.9		
2	none	197.5	35.	0	.35	10
		197.5	35.	99.9		
3	none	395.	35.	0	.35	10
		395.	35.	98.8		
4	none	272.	327.5	0	.35	10
		272.	327.5	99.1		
5	none	391.5	354.9	0	.35	10
		391.5	354.9	99.4		
6	none	557.2	8.1	0	.35	10
		557.2	8.1	99.		
7	none	498.08	27.06	0	.35	10
		498.08	27.06	97.45		

Number of wires = 7
current nodes = 70

	minimum		maximum	
Individual wires	wire	value	wire	value
segment length	7	9.745	1	9.99
radius	1	.35	1	.35

ELECTRICAL DESCRIPTION
Frequencies (MHz)

	frequency		no. of	segment length (wavelengths)	
no.	lowest	step	steps	minimum	maximum
1	1.06	0	1	.0270694	.02775

Sources

source	node	sector	magnitude	phase	type
1	21	1	1,858.64	162.1	voltage
2	61	1	3,252.37	47.7	voltage

Lumped loads

load	node	resistance (ohms)	reactance (ohms)	inductance (mH)	capacitance (uF)	passive circuit
1	1	0	0	11.27	.002	0
2	11	0	0	11.27	.002	0
3	31	0	0	11.27	.002	0
4	41	0	0	11.27	.002	0
5	51	0	0	11.27	.002	0

IMPEDANCE
normalization = 50.

freq (MHz)	resist (ohms)	react (ohms)	imped (ohms)	phase (deg)	VSWR	S11 dB	S12 dB
source = 1; node 21, sector 1							
1.06	26.765	54.387	60.616	63.8	4.3857	-4.0319	-2.1838
source = 2; node 61, sector 1							
1.06	90.325	67.854	112.97	36.9	3.0518	-5.9102	-1.2868

CURRENT rms
Frequency = 1.06 MHz
Input power = 50,000. watts
Efficiency = 100. %
coordinates in degrees

current no.	X	Y	Z	mag (amps)	phase (deg)	real (amps)	imaginary (amps)
GND	0	0	0	1.43E-03	245.6	-5.9E-04	-1.3E-03
2	0	0	9.99	.102054	65.5	.0422478	.0928985
3	0	0	19.98	.162464	65.4	.0675866	.147738
4	0	0	29.97	.202406	65.3	.0846979	.183832
5	0	0	39.96	.224257	65.1	.0944716	.203387
6	0	0	49.95	.228891	64.9	.0971484	.207251
7	0	0	59.94	.216858	64.7	.0928052	.195996
8	0	0	69.93	.188691	64.4	.0814852	.17019
9	0	0	79.92	.144835	64.1	.0631676	.130335
10	0	0	89.91	.0850827	63.8	.0375145	.0763657
END	0	0	99.9	0	0	0	0
GND	161.783	-113.281	0	2.39E-03	64.9	1.02E-03	2.16E-03
12	161.783	-113.281	9.99	.170024	244.8	-.0723513	-.153861
13	161.783	-113.281	19.98	.269442	244.7	-.114957	-.243688
14	161.783	-113.281	29.97	.333861	244.7	-.142884	-.301741
15	161.783	-113.281	39.96	.367601	244.6	-.157881	-.33197
16	161.783	-113.281	49.95	.372586	244.5	-.160649	-.336173
17	161.783	-113.281	59.94	.350291	244.3	-.151679	-.315749
18	161.783	-113.281	69.93	.302238	244.2	-.13147	-.272146
19	161.783	-113.281	79.92	.229875	244.1	-.100481	-.206751
20	161.783	-113.281	89.91	.13369	243.9	-.0587421	-.120093
END	161.783	-113.281	99.9	0	0	0	0
GND	323.565	-226.563	0	21.6789	98.3	-3.1306	21.4517
22	323.565	-226.563	9.88	22.5596	96.9	-2.70676	22.3966
23	323.565	-226.563	19.76	22.4682	96.1	-2.3713	22.3427
24	323.565	-226.563	29.64	21.6681	95.4	-2.04202	21.5716
25	323.565	-226.563	39.52	20.2141	94.9	-1.7145	20.1412
26	323.565	-226.563	49.4	18.155	94.4	-1.39151	18.1016
27	323.565	-226.563	59.28	15.5438	94.	-1.07814	15.5064
28	323.565	-226.563	69.16	12.437	93.6	-.780067	12.4125
29	323.565	-226.563	79.04	8.88396	93.2	-.502391	8.86974
30	323.565	-226.563	88.92	4.89594	92.9	-.248076	4.88965
END	323.565	-226.563	98.8	0	0	0	0
GND	229.403	146.146	0	2.53E-03	172.	-2.51E-03	3.53E-04
32	229.403	146.146	9.91	.179801	351.9	.178002	-.025372
33	229.403	146.146	19.82	.286566	351.8	.283609	-.0410584
34	229.403	146.146	29.73	.357652	351.6	.353825	-.0521756
35	229.403	146.146	39.64	.397148	351.4	.392721	-.059132
36	229.403	146.146	49.55	.406433	351.2	.401692	-.0618977
37	229.403	146.146	59.46	.386257	351.	.381522	-.0602964
38	229.403	146.146	69.37	.337278	350.8	.332914	-.0540814
39	229.403	146.146	79.28	.259935	350.5	.256369	-.0429074
40	229.403	146.146	89.19	.15342	350.2	.151176	-.0261413
END	229.403	146.146	99.1	0	0	0	0
GND	389.95	34.8022	0	6.91E-03	297.3	3.16E-03	-6.14E-03
42	389.95	34.8022	9.94	.491182	117.2	-.224167	.437046
43	389.95	34.8022	19.88	.781921	117.	-.354971	.696703
44	389.95	34.8022	29.82	.974374	116.8	-.439512	.869617
45	389.95	34.8022	39.76	1.07997	116.6	-.483532	.965679
46	389.95	34.8022	49.7	1.10286	116.4	-.489619	.988218
47	389.95	34.8022	59.64	1.04559	116.1	-.459788	.939067
48	389.95	34.8022	69.58	.910537	115.8	-.396149	.819844
49	389.95	34.8022	79.52	.699612	115.5	-.300766	.631662

50	389.95	34.8022	89.46	.411507	115.1	-.174528	.372664
END	389.95	34.8022	99.4	0	0	0	0
GND	551.641	-78.5101	0	.0121987	335.1	.0110678	-5.13E-03
52	551.641	-78.5101	9.9	.864591	155.	-.783821	.364887
53	551.641	-78.5101	19.8	1.37459	154.9	-1.24475	.583173
54	551.641	-78.5101	29.7	1.7106	154.7	-1.54688	.730287
55	551.641	-78.5101	39.6	1.89325	154.5	-1.70929	.814067
56	551.641	-78.5101	49.5	1.9304	154.3	-1.73965	.836699
57	551.641	-78.5101	59.4	1.82716	154.1	-1.64323	.798951
58	551.641	-78.5101	69.3	1.58843	153.8	-1.42524	.701272
59	551.641	-78.5101	79.2	1.21828	153.5	-1.09032	.543526
60	551.641	-78.5101	89.1	.715258	153.2	-.638271	.322807
END	551.641	-78.5101	99.	0	0	0	0
GND	443.556	-226.588	0	20.3542	10.8	19.9946	3.80896
62	443.556	-226.588	9.745	21.496	6.1	21.3728	2.29813
63	443.556	-226.588	19.49	21.6492	3.5	21.609	1.31903
64	443.556	-226.588	29.235	21.0853	1.5	21.0781	.548589
65	443.556	-226.588	38.98	19.8464	359.9	19.8463	-.044013
66	443.556	-226.588	48.725	17.9713	358.5	17.9652	-.466621
67	443.556	-226.588	58.47	15.5048	357.3	15.488	-.721159
68	443.556	-226.588	68.215	12.4962	356.3	12.47	-.808652
69	443.556	-226.588	77.96	8.98928	355.3	8.95961	-.729799
70	443.556	-226.588	87.705	4.98936	354.5	4.96606	-.48158
END	443.556	-226.588	97.45	0	0	0	0

WLNO - Details of Model for DA-NIGHT - Exhibit 6

Using Expert MININEC Broadcast Professional, Version 14.5, with the individual tower's characteristics that were verified by the individual tower impedance measurements. Calculations were made to determine the complex voltage values for sources located at ground level under each tower of the array to produce current moment sums for the towers that, when normalized, equated to the theoretical field parameters of the authorized directional antenna pattern.

Tower 7 of the array, which is not used by the nighttime pattern, was detuned by terminating the tower with a parallel circuit of .002 uF and 11.27 uH, shown at the base (node 61) in the tabulation. These values provide an impedance that inhibits current flow for the method of moments modeled operating impedance in the directional antenna with a field ratio of 0.0 specified for Tower 7.

Tower	Wire	Base Node
1	1	1
2	2	11
3	3	21
4	4	31
5	5	41
6	6	51
7	7	61

It should be noted that voltages and currents shown on the tabulations that are not specified as "rms" values are the corresponding peak values.

WLNO Full Nighttime Model

MEDIUM WAVE ARRAY SYNTHESIS FROM FIELD RATIOS

Frequency = 1.06 MHz

tower	field ratio magnitude	phase (deg)
1	1.	0
2	1.97	4.5
3	1.	9.
4	1.	76.
5	1.97	80.5
6	1.	85.
7	1.E-05	0

VOLTAGES AND CURRENTS - rms

source node	voltage magnitude	phase (deg)	current magnitude	phase (deg)
1	190.371	69.5	3.5775	2.3
11	325.074	69.1	7.18315	6.9
21	61.2371	104.4	3.87698	8.7
31	361.952	139.1	3.30764	82.4
41	614.433	140.9	6.71585	86.3
51	246.565	135.7	3.60418	90.5
61	145.06	283.4	.311611	12.4

Sum of square of source currents = 297.115
Total power = 5,000. watts

TOWER ADMITTANCE MATRIX

admittance	real (mhos)	imaginary (mhos)
Y(1, 1)	.00687857	-.00839305
Y(1, 2)	.000865087	-.00197091
Y(1, 3)	5.4565E-05	.00181261
Y(1, 4)	-.00242818	-.0020514
Y(1, 5)	-.000655861	.00074108
Y(1, 6)	.00162802	.000101205
Y(1, 7)	.00140478	.000776472
Y(2, 1)	.000865089	-.00197091
Y(2, 2)	.00664528	-.00822494
Y(2, 3)	.00108018	-.00178032
Y(2, 4)	-.00226187	-.00257042
Y(2, 5)	-.00291916	-.00176449
Y(2, 6)	-.00162695	.000909108
Y(2, 7)	-.00173166	-7.5881E-05
Y(3, 1)	5.4568E-05	.00181261
Y(3, 2)	.0010802	-.0017803
Y(3, 3)	.00727839	-.00809521
Y(3, 4)	-.00147163	.000974573
Y(3, 5)	-.00214726	-.00308858
Y(3, 6)	-.00128015	-.00208407
Y(3, 7)	.00289013	.000306985
Y(4, 1)	-.00242817	-.00205141
Y(4, 2)	-.00226185	-.00257043
Y(4, 3)	-.00147164	.00097457
Y(4, 4)	.00691772	-.00874089
Y(4, 5)	.00161122	-.00113812
Y(4, 6)	-.000286886	.00208288
Y(4, 7)	-.000707913	.00162981
Y(5, 1)	-.000655865	.000741071

Y(5, 2)	-.00291915	-.00176449
Y(5, 3)	-.00214727	-.00308857
Y(5, 4)	.00161122	-.00113813
Y(5, 5)	.00618451	-.00881295
Y(5, 6)	.000720612	-.00290388
Y(5, 7)	-.000824396	-.00311126
Y(6, 1)	.00162802	.000101199
Y(6, 2)	-.00162695	.000909104
Y(6, 3)	-.00128015	-.00208405
Y(6, 4)	-.00028688	.00208287
Y(6, 5)	.000720625	-.00290387
Y(6, 6)	.00856156	-.0102219
Y(6, 7)	.00312002	-.00370095
Y(7, 1)	.00140477	.000776476
Y(7, 2)	-.00173166	-7.5898E-05
Y(7, 3)	.00289013	.000307079
Y(7, 4)	-.000707923	.00162979
Y(7, 5)	-.000824326	-.00311126
Y(7, 6)	.0031201	-.0037009
Y(7, 7)	.00935004	-.0086293

TOWER IMPEDANCE MATRIX

impedance	real (ohms)	imaginary (ohms)
Z(1, 1)	62.479	69.4554
Z(1, 2)	-21.3513	-14.9577
Z(1, 3)	12.7873	7.6898
Z(1, 4)	-16.7919	9.62567
Z(1, 5)	13.1226	6.12848
Z(1, 6)	-7.71143	-5.72663
Z(1, 7)	3.28345	-10.9125
Z(2, 1)	-21.3512	-14.9577
Z(2, 2)	62.1539	69.0494
Z(2, 3)	-20.1249	-14.8984
Z(2, 4)	-16.6082	7.72659
Z(2, 5)	-17.7644	9.2557
Z(2, 6)	12.4739	5.34207
Z(2, 7)	-7.80095	16.9191
Z(3, 1)	12.7873	7.68972
Z(3, 2)	-20.1251	-14.8982
Z(3, 3)	57.9596	64.8506
Z(3, 4)	10.3916	8.10792
Z(3, 5)	-15.3192	7.60753
Z(3, 6)	-15.8642	10.9344
Z(3, 7)	9.70079	-33.6883
Z(4, 1)	-16.7918	9.62575
Z(4, 2)	-16.6082	7.72672
Z(4, 3)	10.3916	8.10793
Z(4, 4)	59.9386	64.4735
Z(4, 5)	-20.2798	-14.519
Z(4, 6)	12.4703	7.92698
Z(4, 7)	11.1625	-2.60471
Z(5, 1)	13.1226	6.12845
Z(5, 2)	-17.7645	9.25574
Z(5, 3)	-15.3191	7.60741
Z(5, 4)	-20.2797	-14.5191
Z(5, 5)	60.9867	65.7443
Z(5, 6)	-20.579	-15.1736
Z(5, 7)	-15.6095	8.74813
Z(6, 1)	-7.71145	-5.72659
Z(6, 2)	12.474	5.34202

Z(6, 3)	-15.8643	10.9344
Z(6, 4)	12.4703	7.92697
Z(6, 5)	-20.579	-15.1735
Z(6, 6)	61.5211	64.9755
Z(6, 7)	-13.87	-20.1585
Z(7, 1)	3.28336	-10.9125
Z(7, 2)	-7.80068	16.9192
Z(7, 3)	9.70002	-33.6884
Z(7, 4)	11.1625	-2.60475
Z(7, 5)	-15.6094	8.74834
Z(7, 6)	-13.8703	-20.1582
Z(7, 7)	54.0473	59.0836

WLNO Full Nighttime Model

GEOMETRY
Wire coordinates in degrees; other dimensions in meters
Environment: perfect ground

wire	caps	Distance	Angle	Z	radius	segs
1	none	0	0	0	.35	10
		0	0	99.9		
2	none	197.5	35.	0	.35	10
		197.5	35.	99.9		
3	none	395.	35.	0	.35	10
		395.	35.	98.8		
4	none	272.	327.5	0	.35	10
		272.	327.5	99.1		
5	none	391.5	354.9	0	.35	10
		391.5	354.9	99.4		
6	none	557.2	8.1	0	.35	10
		557.2	8.1	99.		
7	none	498.08	27.06	0	.35	10
		498.08	27.06	97.45		

Number of wires = 7
current nodes = 70

	minimum		maximum	
Individual wires	wire	value	wire	value
segment length	7	9.745	1	9.99
radius	1	.35	1	.35

ELECTRICAL DESCRIPTION
Frequencies (MHz)

no.	frequency lowest	step	no. of steps	segment length (wavelengths) minimum	maximum
1	1.06	0	1	.0270694	.02775

Sources

source	node	sector	magnitude	phase	type
1	1	1	269.226	69.5	voltage
2	11	1	459.724	69.1	voltage
3	21	1	86.6023	104.4	voltage
4	31	1	511.877	139.1	voltage
5	41	1	868.939	140.9	voltage
6	51	1	348.695	135.7	voltage

Lumped loads

load	node	resistance (ohms)	reactance (ohms)	inductance (mH)	capacitance (uF)	passive circuit
1	61	0	0	11.27	.002	0

IMPEDANCE
normalization = 50.

freq (MHz)	resist (ohms)	react (ohms)	imped (ohms)	phase (deg)	VSWR	S11 dB	S12 dB
source = 1; node 1, sector 1							
1.06	20.151	49.352	53.307	67.8	5.1059	-3.4468	-2.6137
source = 2; node 11, sector 1							
1.06	21.173	39.805	45.086	62.	4.0336	-4.3984	-1.9601

source = 3; node 21, sector 1

1.06	-1.8356	15.864	15.97	96.6	****	****	****

source = 4; node 31, sector 1

1.06	58.954	92.3	109.52	57.4	4.7048	-3.7495	-2.3788

source = 5; node 41, sector 1

1.06	53.09	73.572	90.727	54.2	3.778	-4.7102	-1.7917

source = 6; node 51, sector 1

1.06	49.883	47.028	68.556	43.3	2.4842	-7.4123	-.86958

CURRENT rms
Frequency = 1.06 MHz
Input power = 5,000. watts
Efficiency = 100. %
coordinates in degrees

current no.	X	Y	Z	mag (amps)	phase (deg)	real (amps)	imaginary (amps)
GND	0	0	0	3.5518	1.7	3.55022	.106014
2	0	0	9.99	3.67978	.6	3.67956	.0410493
3	0	0	19.98	3.65518	0.0	3.65518	7.28E-04
4	0	0	29.97	3.51763	359.5	3.51751	-.0289286
5	0	0	39.96	3.27578	359.1	3.2754	-.0493979
6	0	0	49.95	2.93752	358.8	2.93688	-.0612321
7	0	0	59.94	2.51149	358.5	2.51065	-.0647937
8	0	0	69.93	2.00685	358.3	2.00593	-.0604579
9	0	0	79.92	1.43167	358.1	1.43084	-.0486165
10	0	0	89.91	.787863	357.9	.787311	-.0294798
END	0	0	99.9	0	0	0	0
GND	161.783	-113.281	0	7.1709	7.1	7.11577	.887547
12	161.783	-113.281	9.99	7.36317	6.	7.32316	.766558
13	161.783	-113.281	19.98	7.27429	5.3	7.24313	.672625
14	161.783	-113.281	29.97	6.97011	4.8	6.94577	.581937
15	161.783	-113.281	39.96	6.4666	4.4	6.4478	.492732
16	161.783	-113.281	49.95	5.77938	4.	5.76516	.405123
17	161.783	-113.281	59.94	4.92581	3.7	4.91542	.319735
18	161.783	-113.281	69.93	3.92441	3.5	3.91723	.237222
19	161.783	-113.281	79.92	2.79156	3.2	2.78709	.15795
20	161.783	-113.281	89.91	1.53181	3.	1.52964	.0814872
END	161.783	-113.281	99.9	0	0	0	0
GND	323.565	-226.563	0	3.81361	7.8	3.77833	.517568
22	323.565	-226.563	9.88	3.82703	7.9	3.79064	.526473
23	323.565	-226.563	19.76	3.72826	8.	3.69207	.518208
24	323.565	-226.563	29.64	3.53321	8.1	3.49819	.496222
25	323.565	-226.563	39.52	3.2483	8.2	3.21539	.461272
26	323.565	-226.563	49.4	2.88086	8.3	2.85095	.414031
27	323.565	-226.563	59.28	2.43923	8.4	2.41322	.355212
28	323.565	-226.563	69.16	1.93228	8.5	1.91107	.285516
29	323.565	-226.563	79.04	1.36773	8.6	1.35222	.20539
30	323.565	-226.563	88.92	.747373	8.8	.738582	.114291
END	323.565	-226.563	98.8	0	0	0	0
GND	229.403	146.146	0	3.2869	81.7	.476342	3.2522
32	229.403	146.146	9.91	3.54416	78.7	.69702	3.47494
33	229.403	146.146	19.82	3.60571	77.	.81246	3.51299
34	229.403	146.146	29.73	3.53584	75.7	.872666	3.42646
35	229.403	146.146	39.64	3.34476	74.7	.883461	3.22598
36	229.403	146.146	49.55	3.0404	73.8	.847553	2.91988
37	229.403	146.146	59.46	2.6311	73.	.767064	2.5168
38	229.403	146.146	69.37	2.12575	72.4	.644103	2.02582

39	229.403	146.146	79.28	1.53218	71.7	.480407	1.45491
40	229.403	146.146	89.19	.851613	71.1	.275537	.805807
END	229.403	146.146	99.1	0	0	0	0
GND	389.95	34.8022	0	6.73555	86.7	.386051	6.72448
42	389.95	34.8022	9.94	7.14062	84.	.751881	7.10093
43	389.95	34.8022	19.88	7.19377	82.4	.953858	7.13025
44	389.95	34.8022	29.82	7.00106	81.2	1.07358	6.91825
45	389.95	34.8022	39.76	6.58111	80.2	1.12022	6.48507
46	389.95	34.8022	49.7	5.94954	79.4	1.09782	5.84737
47	389.95	34.8022	59.64	5.12324	78.6	1.00936	5.02282
48	389.95	34.8022	69.58	4.12033	78.	.857863	4.03003
49	389.95	34.8022	79.52	2.9569	77.4	.645908	2.88549
50	389.95	34.8022	89.46	1.63643	76.8	.373239	1.59329
END	389.95	34.8022	99.4	0	0	0	0
GND	551.641	-78.5101	0	3.57697	92.4	-.149026	3.57387
52	551.641	-78.5101	9.9	3.70007	89.7	.0168173	3.70003
53	551.641	-78.5101	19.8	3.67458	88.2	.117298	3.67271
54	551.641	-78.5101	29.7	3.53701	86.9	.188404	3.53199
55	551.641	-78.5101	39.6	3.29509	85.9	.233817	3.28678
56	551.641	-78.5101	49.5	2.95624	85.1	.254776	2.94524
57	551.641	-78.5101	59.4	2.52881	84.3	.251967	2.51623
58	551.641	-78.5101	69.3	2.0218	83.6	.226031	2.00913
59	551.641	-78.5101	79.2	1.44317	82.9	.177521	1.43221
60	551.641	-78.5101	89.1	.794748	82.3	.106197	.787621
END	551.641	-78.5101	99.	0	0	0	0
GND	443.556	-226.588	0	2.15E-03	7.	2.14E-03	2.6E-04
62	443.556	-226.588	9.745	.150542	186.8	-.149471	-.0179256
63	443.556	-226.588	19.49	.238336	186.7	-.236719	-.027713
64	443.556	-226.588	29.235	.295316	186.5	-.293429	-.0333386
65	443.556	-226.588	38.98	.325353	186.3	-.323416	-.0354527
66	443.556	-226.588	48.725	.330133	186.	-.328325	-.0345051
67	443.556	-226.588	58.47	.310891	185.7	-.309347	-.0309463
68	443.556	-226.588	68.215	.268839	185.4	-.267648	-.0252735
69	443.556	-226.588	77.96	.205064	185.	-.204271	-.0180211
70	443.556	-226.588	87.705	.119728	184.6	-.119334	-9.7E-03
END	443.556	-226.588	97.45	0	0	0	0

WLNO - Sample System Measurements - Exhibit 7

Using a Hewlett-Packard 8753C network analyzer and a Tunwall Radio directional coupler, in a calibrated measurement system, impedance measurements were made of the antenna monitor sampling system. The towers were placed in an open circuited condition by removing the ATU output j-plug. The measurement equipment was connected to the antenna monitor end of the sample lines and measurements were made for two conditions. The first condition was with the sample line terminated in its associated Delta Electronics TCT sampler and the second condition where the sample line was open circuited by disconnecting the line from its TCT.

The following table shows the frequencies of the first and second resonances. As the length of a distortionless transmission line is 180 electrical degrees at the difference frequency between adjacent resonant frequencies, and frequencies of resonance occur at odd multiples of 90 degrees electrical length. The sample line length at the resonant frequency closest to the carrier frequency, was found to be 450 electrical degrees. The electrical lengths at carrier frequency appearing in the following table were calculated by dividing the carrier frequency by the resonant frequency closest to the carrier and multiplying by 450 degrees.

Tower	Sample Line Open-Circuited First Frequency of Resonance (MHZ)	Sample Line Open-Circuited Second Frequency of Resonance (MHZ)	Sample Line Calculated Electrical Length at 1060 kHz (Degrees)	1060 kHz Measured Z with TCT-1 Connected (Ohms)
1	.721357	1.204400	396.0	50.7 +j 0.06
2	.721727	1.203890	396.2	51.2 -j 0.02
3	.721357	1.204400	396.0	51.3 -j 0.39
4	.721430	1.205930	395.5	51.8 +j 0.51
5	.721090	1.205080	395.8	52.0 -j 1.04
6	.721090	1.205250	395.8	50.9 +j 0.57
7	.721120	1.205420	395.7	51.3 +j 0.18

The sample line lengths meet the specification that they be equal in length within one electrical degree.

The Characteristic impedance was calculated using the following formula, where R1 +jX1 and R2 +jX2 are the measured impedances at the +45 and -45 degree offset frequencies respectively:

$$Zo = ((R1^2 + X1^2)^{1/2} \bullet (R2^2 + X2^2)^{1/2})^{1/2}$$

Tower	+45 Degree Offset Frequency (MHz)	+45 Degree Measured Impedance (Ohms)	-45 Degree Offset Frequency (MHz)	-45 Degree Measured Impedance (Ohms)	Calculated Characteristic Impedance (Ohms)
1	1.3248	7.45 +j48.37	1.0840	6.39 -j49.26	49.31
2	1.3243	7.71 +j49.08	1.0835	6.34 -j49.04	49.56
3	1.3248	8.06 +j49.69	1.0839	6.42 -j49.10	49.93
4	1.3265	8.20 +j49.96	1.0853	6.75 -j50.08	50.58
5	1.3256	8.16 +j49.71	1.0846	6.66 -j49.48	50.15
6	1.3258	7.73 +j48.87	1.0847	6.99 -j51.47	50.79
7	1.3259	7.71 +j49.33	1.0849	6.45 -j49.80	50.07

The sample line measured characteristic impedances meet the requirement that they be equal within 2 ohms.

The TCTs were calibrated by measuring their outputs with a common reference signal using a Hewlett-Packard 8753C network analyzer in a calibrated measurement system. The TCTs were placed side by side, bolted to a two inch wide piece of copper strap with a conductor passing the reference signal through them. The outputs of the TCTs were fed into the Channel A and Channel B receiver inputs of the 8753C, which was set up to measure the relative ratios and phases of the output voltages. The following results were measured for the carrier frequency, 1060 kHz:

WILLOUGHBY & VOSS

Tower	Ratio	Phase (deg)	TCT Model #	TCT Serial #
1	Reference	Reference	TCT-1	918
2	0.9988	+0.4460	TCT-1	1422
3	1.0004	+0.5000	TCT-1	917
4	1.0018	+0.3180	TCT-1	427
5	0.9894	+0.6800	TCT-1	919
6	0.9975	+0.5480	TCT-1	921
7	1.0000	+0.1180	TCT-1	422

TCT-1 are 0.5 Volt/amp toroidal current transformers manufactured by Delta Electronics. These TCTs are rated for absolute magnitude accuracy of +/- 2% and absolute phase accuracy of +/- 3 degrees. The maximum measured transformer-to-transformer variations among the seven were 1.24% and 0.680 degree, and as such provide far more accurate relative indications than could be the case within the manufacturer's rated accuracy.

WLNO - Reference Field Strength Measurements - Exhibit 8

Reference field strength measurements were made using a Potomac Instruments FIM-4100 meter, the meter being factory calibrated July 27, 2009. Measurements were made at three point locations along each monitored radial and along a radial thru the major lobe of each directional pattern. The following pages contain the measured field strength values, the GPS coordinates and point descriptions.

WLNO, 1060 kHz.

Daytime Reference Field Strength Measurements

Radial Deg. T	Point Num.	Distance (km)	Field (mV/m)	Coordinates Lat. N	(NAD 83) Long. W	Description
0.0	1	2.10	535.8	29-55-02.6	89-59-51.1	SE corner pf LaCour Monique & Rue Nicole
	2	5.54	328.0	29-55-46.3	89-59-52.0	SW corner of Gen. Meyer Dr. & Danbury Dr.
	3	8.44	200.0	29-57-20.1	89-59-51.7	On St. Bernard Hwy at West Building Materials (closed)
132	1	2.06	91.7	29-52-03.9	89-58-54.4	On Main St. 20 paces south of pole guy, west side of road.
	2	3.32	14.3	29-51-38.7	89-58-15.8	English Turn Rd. directly across from substation, 20 paces south
	3	4.23	29.2	29-51-15.9	89-57-53.3	On LA 39, no landmarks
225	1	2.73	83.1	29-51-46.5	90-01-04.9	On Engineers Rd, across from smaller Versabar Bldg
	2	5.51	45.4	29-50-42.4	90-02-17.4	At end of Horseshoe Rd East, at end of pavement
	3	7.29	38.9	29-50-00.5	90-03-03.0	end of Gunther Lane, at fire hydrant

WLNO, 1060 kHz.

Nighttime Reference Field Strength Measurements

Radial Deg. T	Point Num.	Distance (km)	Field (mV/m)	Coordinates (NAD 83) Lat. N	Long. W	Description
35.0	1	1.90	26.40	29-53-52.1	89-58-58.6	At fire hydrant F. Edward Hebert Blvd
	2	5.17	11.40	29-55-02.0	89-57-56.0	Atop levee at corner of Oliver & Rankin
	3	7.00	9.80	29-55-54.5	89-57-24.2	On sidewalk - middle of sand color brick building
69.5	1	8.16	3.26	29-54-20.1	89-55-05.6	At property line between 11751 and 11777
	2	9.46	0.92	29-54-35.9	89-54-20.7	At 1st turn-in past Franckle Pl. 30 paces SE of concrete slab
	3	11.2	1.30	29-54-56.7	89-53.20.8	At deadend of Florida Av & Acorn Dr. next to Dead End sign
132	1	2.06	8.17	29-52-03.9	89-58-54.4	On Main St. 20 paces south of pole guy,west side of street
	2	3.32	9.13	29-51-38.7	89-58-15.8	English Turn directly across from substation 20 paces south
	3	4.23	17.1	29-51-15.9	89-57-53.3	On LA-39, no landmarks
190	1	1.90	31.8	29-51-46.8	90-00-05.1	I (eye) Street & Good News Ave, SE corner
	2	6.19	7.05	29-49-30.3	90-00-32.3	Upsilon & Omega at driveway of 501
	3	8.56	9.86	29-48-14.6	90-00-46.8	Sewer Plant Road at pipeline sign across from green mailbox
215	1	1.33	43.2	29-51-54.0	90-00-33.1	Theta Drive at Epsilon at stop sign
	2	2.00	18.5	29-51-50.8	90-00-49.1	Rho Street, walk to middle of culvert, past chain gate
	3	2.70	6.10	29-52-13.2	90-00-21.2	At last paved parking slot toward driving range
253	1	2.96	26.0	29-52-21.6	90-01-37.0	On Bannerwood at SE corner of school yard at Telco box “B”
	2	4.07	19.0	29-52-08.0	90-02-15.7	Lawrence and Bellemeade Blvd at fire hydrant
	3	5.30	16.2	29-51-59.0	90-03-00.7	Corner of Cerritas Via & LaQuinta at stop sign

WLNO, 1060 kHz.

Nighttime Reference Field Strength Measurements

Radial Deg. T	Point Num.	Distance (km)	Field (mV/m)	Coordinates Lat. N	(NAD 83) Long. W	Description
305	1	3.09	489	29-53-46.9	90-01-22.8	768 Oakwood Dr. at driveway
	2	5.41	159	29-54-29.2	90-02-34.6	Whitney Ave even with door at 1037
	3	7.75	202	29-55-13.5	90-03-45.2	First Street & Amelia Street, river side even with str. sign
356	1	4.20	39.1	29-55-02.6	89-59-58.8	Lacour Monique & Rue Mignon at light post
	2	6.06	18.0	29-56-02.6	90-00-01.8	Ellen Park Place & Patterson, 10paces toward river from Str sign
	3	8.60	15.7	29-57-24.8	90-00-07.7	Even with door of 7005 St. Claude Ave

WLNO - Direct Measurement of Power - Exhibit 9

Measurement of the Common Point Impedance for each pattern was made with a Hewlett-Packard 8753-C Vector Network Analyzer and a Tunwall Radio Directional Coupler. The analyzer was connected at the node directly adjacent to the common point current meter. The resistance value was adjusted with the common point matching network to provide the correct impedance at the authorized common point current value for each directional antenna pattern. The measured Common Point Impedance is R = 50.0 Ohms, X= -j 10.0 Ohms for both Day and Night operation. The common point currents of 32.4 Amperes for Daytime and 10.4 Amperes for Nighttime were established.

WLNO - Antenna Monitor and Sample System - Exhibit 10

WLNO utilizes a Potomac Instruments AM-1901 antenna monitor. The antenna monitor is provided an ATU output sample over equal length (see Exhibit 7) sample lines from Delta Electronics Toroidal Current Transformers, model TCT-1, that provides a 0.5 volt per ampere. The sample lines are LDF-12-50J, ½ inch foam dielectric coaxial cable. Equal length short pieces of RG-58 cable facilitate connection to the antenna monitor in the equipment rack.

WLNO - Radio Frequency Radiation Considerations - Exhibit 11

Operation of WLNO will not result in exposure of the workers or the general public to levels of non-ionizing energy in excess of the limits specified in 47 CFR 1.1310. Access to the transmitter site is restricted by locked fences. Each tower base is enclosed within a locked perimeter fence spaced in accordance with Recommended Guidelines. Warning signs are posted on the entry gate and on all four sides of each tower base fence. The signs state that a potential exists for possible exposure to hazardous R.F. energy. In the case where personnel must enter the tower enclosure fences, operation is switched to non-directional operation at reduced power on Tower 3 or operation is ceased, in accordance with the WLNO RFR Plan.

WLNO - Statement of As Built Array Geometry - Exhibit 12

WLNO is an existing licensed facility. WLNO (formerly WNOE-AM) was constructed at the present location in 1949 and licensed in 1950. The station has operated continuously from this site with these tower locations since original construction. The instant application relies on the same theoretical field parameters and array geometry. The last Full Proof of Performance was filed in 1981.

WLNO is exempted from the requirement to submit a surveyor's certification, per FCC Public Notice DA 09-2340, dated October 29, 2009.